INVITATION TO BID

CITY OF LOXLEY

Sealed Bids will be received by the City of Loxley in their offices located at 1089 S. Hickory St. Loxley, Alabama, until **10:00 A.M. on Tuesday, April 2, 2024**, then publicly opened thereafter, for furnishing all labor and materials, and performing all work required by the City of Loxley and described as follows:

City of Loxley Project No. 2023-02
Loxley Section 5307 Transit Hub Project

The Loxley Municipal Park Transit Hub Project includes the construction of a Transit Hub and various other site improvements including masonry walls, wayfinding signage, site furnishings and a restroom facility that includes plumbing and mechanical. The site work involved in the project scope includes, but is not limited to drainage, tree pruning, paving, electrical, lighting, landscape, and irrigation. This project location will require coordination with the City. This project's anticipated start date will be May 6, 2024.

Plans, Drawings and Specifications are on file and may be viewed by appointment only. Please contact the Project Manager, Brian Puckett, to schedule an appointment. Prior to opening, copies of the bid packet, including plans, drawings and specifications will be available at www.cityofloxley.com. Bid advertisement, addenda and other related documents will be posted on the City of Loxley website: www.cityofloxley.com. Questions or comments pertaining to this bid must be presented in writing and sent via e-mail to the attention of the **Project Manager, Brian Puckett**, email: brian@whlcarchitecture.com seven (7) days prior to the bid opening or will be forever waived.

All Bids must be on blank bid forms provided in the Bid documents. Bids shall be accompanied by a BID SECURITY equal to five percent (5%) of the bid price, but not to exceed ten-thousand dollars ($10,000.00). BID SECURITY shall be in the form of a Bid Bond signed by a Bonding company authorized to do business in the State of Alabama, or a Cashier's Check payable to the City of Loxley.

A **Performance Bond** in the form and terms approved by the City of Loxley in an amount not less than the sum of the bid will be required at the signing of the CONTRACT, and in addition, a **Labor and Materials Bond** in an amount not less than fifty percent (50%) of the CONTRACT price insuring payment for all labor and materials.

THERE WILL BE A NON-MANDATORY PREBID MEETING on Wednesday, March 20, 2024, at 2:30 P.M. at the City of Loxley offices located at 1089 S. Hickory St. Loxley, Alabama**.** Bidders are not required to attend the meeting, but attendance is highly recommended.

The Project is federally funded by the Federal Transit Administration (FTA)/Eastern Shore Metropolitan Planning Organization (ESMPO) 5307 Urbanized Area grant program administered through the Alabama Department of Transportation. As such, the Contractor shall comply with all applicable Federal Clauses outlined in Attachment **"Federal Clauses"** of this solicitation. In addition, Contractor must be registered and in good standing in the System for Award Management (SAM.gov). The City of Loxley is an Equal Opportunity Employer and requires that all contractors comply with the Equal Employment Opportunity Commission (EEOC) laws and the provisions of the Contract documents in this regard.

Requirements and goals for Disadvantaged Business Enterprise (DBE) participation in this Project are as follows: A minimum of three point five eight percent (3.58%) of the total contract price, as awarded, shall be established as a goal to be made available to certified DBEs.

Prior to Contract award, the apparent successful bidder shall submit a written acknowledgement of the above goal and shall include names of DBE subcontractors, addresses of contact persons, a description of work to be performed, dollar values of each proposed DBE subcontract and proof of the subcontractors eligibility as a DBE. This information shall be submitted on Attachment C - DBE Letter of Intent and Attachment D - DBE Affidavit that are furnished with this solicitation. If the goals are not met, the bidder must demonstrate that sufficient good faith efforts were made to meet the DBE contract goals and shall document the steps that were taken to obtain DBE participation (see Attachment E - DBE Unavailable Certification.) Failure to provide required documentation of good faith efforts may be reason for disqualification of the Bid/Proposal.

All bids, with their guarantee, must be enclosed in a sealed, opaque envelope, clearly identified on the outside as "**Sealed Bid**" **with Bid Name, Bid Number, City of Loxley's name and address, and the Bidder's name, address, and General Contractor's License Number.** Each bid must be in a separate envelope. Bids made out in pencil will not be accepted. Failure to observe the instructions contained herein will constitute grounds for rejection of your bid. The City reserves the right to accept or reject all bids, or any portions thereof, and to waive informalities, and to furnish any item of material or work to change the amount of the **CONTRACT**, whichever is in the best interest of the City of Loxley.

The **CONTRACTOR** must furnish to the City of Loxley at the time of the signing of the **CONTRACT**, a Certificate of Insurance coverage as provided in the Bid documents which will include Comprehensive Insurance, Contractor's Automobile, and where applicable, Owner's Protective Liability insurance, Subcontractor's Public Liability and Property Damage Insurance. The company that is awarded the bid must have Workman's Compensation Insurance on all its employees, if work is to be performed on City of Loxley premises. General Liability Insurance, specifying coverage, must be maintained to hold the City of Loxley harmless in the event of an accident. See bid packet for details.

No bids will be considered unless the Bidder, whether resident or non-resident of Alabama, is properly qualified to submit a bid for this type of work in accordance with all applicable laws of the State of Alabama. Where applicable, this shall include evidence of holding a current license from the Alabama Licensing Board for General Contractors, Montgomery, Alabama, as required by Chapter 8, Title 34, of the Code of Alabama, 1975. In addition, the awarded vendor, if a non-resident of the State, and if a corporation, shall show evidence of having qualified with the Secretary of State to do business in the State of Alabama, http://sos.alabama.gov/business-entities. Awarded Bidder must have a current business license or purchase a business license with the City of Loxley prior to work performed. No bids shall be withdrawn for the period of thirty (30) days subsequent to the opening of bids without the consent of the City of Loxley, Baldwin County, Alabama. Once completed, a tabulation of the responsive and responsible bids will be available for public viewing by visiting the following web address: www.cityofloxley.com.

Robert Davis, Superintendent of Utilities
City of Loxley
Loxley, Alabama

TRANSIT HUB PAVILION

FTA/EWSMPO 5307 FUNDED PROJECT

Loxley, Alabama



CIVIL

	CIVIL COVER SHEET
1 OF 1	EXISTING CONDITIONS PLAN
D01	DEMOLITION & TREE REMOVAL PLAN
C01	SITE PLAN
C02	GRADING & DRAINAGE PLAN
C03	EROSION & SEDIMENT CONTROL PLAN
C04	UTILITY PLAN
C05	CONSTRUCTION DETAILS
C06	CONSTRUCTION DETAILS
C07	CONSTRUCTION DETAILS

LANDSCAPE

H10	HARDSCAPE PLAN
H11	HARDSCAPE DETAILS
H12	HARDSCAPE DETAILS
L10	LANDSCAPE PLAN
L11	LANDSCAPE DETAILS & SCHEDULE
I10	IRRIGATION PLAN
I11	IRRIGATION DETAILS
I12	IRRIGATION DETAILS

STRUCTURAL

S0.1	GENERAL NOTES
S0.2	GENERAL NOTES
S0.3	GENERAL NOTES
S1.1	FOUNDATION SLAB PLAN
S1.2	BOTTOM CHORD BRACING PLAN
S1.3	ROOF FRAMING PLAN
S1.4	STRUCTURAL TRUSS ELEVATIONS
S2.1	MASONRY SECTIONS & DETAILS
S3.1	FOUNDATION SECTIONS & DETAILS
S4.1	ROOF FRAMING SECTIONS & DETAILS
S4.2	ROOF FRAMING SECTIONS & DETAILS

ARCHITECTURAL

ADA	ADA GUIDELINES
A2.00	FLOOR PLAN/ROOF PLAN
A2.01	SEATING FLOOR PLAN
A3.00	EXTERIOR ELEVATIONS
A4.00	BUILDING SECTIONS
A4.01	BUILDING SECTIONS
A9.00	INTERIOR ELEVATIONS/ENLARGED PLAN
A10.00	REFLECTED CEILING PLAN

MECHANICAL/ELECTRICAL/PLUMBING

E1.00	ELECTRICAL LEGEND AND ABBREVIATIONS
E1.10	ELECTRICAL SPECIFICATIONS
E1.20	ELECTRICAL SITE PLAN / NEW WORK
E2.00	LIGHTING PLAN
E2.10	POWER PLAN
E2.20	MECHANICAL PLAN
E3.00	LIGHTING FIXTURE SCHEDULE
E4.00	ELECTRICAL DETAILS & SINGLE LINE DIAGRAM
P1.00	PLUMBING SCHEDULE & NOTES
P2.00	PLUMBING PLAN
P3.00	PLUMBING DETAILS
M1.00	HVAC SCHEDULE, DETAILS & NOTES
M2.00	HVAC PLAN

ABBREVIATIONS

&	AND
@	AT
∠	ANGLE
A/C	AIR CONDITIONING
ADJ	ADJACENT
AFF	ABOVE FINISHED FLOOR
ALUM	ALUMINUM
ALT	ALTERNATE
APPROX	APPROXIMATE (LY)
ARCH	ARCHITECT
ATTEN	ATTENUATION
BTWN	BETWEEN
BLDG	BUILDING
BLKG	BLOCKING
BM	BEAM
BOT	BOTTOM
BRG	BEARING
℄	CENTERLINE
C/C	CENTER TO CENTER
C.T.	CERAMIC TILE
C.F.	CUBIC FOOT
CFCI	CONTRACTOR FURNISHED, CONTRACTOR INSTALLED
CNTR	COUNTER
CHKBD	CHALKBOARD
CHR	CHAIR
CIPC	CAST IN PLACE CONCRETE
CLG	CEILING
CLO	CLOSET
CLR	CLEAR, CLEARANCE
CMU	CONCRETE MASONRY UNIT
DIM	DIMENSION
DN	DOWN
DS	DOWNSPOUT
DTL	DETAIL
DWG	DRAWING
EA	EACH
EF	EXHAUST FAN
EJ	EXPANSION JOINT
EXP JT	EXPANSION JOINT
EL	ELEVATION
ELEC	ELECTRIC
ELEV	ELEVATION
EMER	EMERGENCY
ENCL	ENCLOSE
ENGR	ENGINEER
EQ	EQUAL
EQUIP	EQUIPMENT
EST	ESTIMATE
EWC	ELECTRIC WATER COOLER
EXIST	EXISTING
EXP	EXPOSED
EXPN	EXPANSION
EXT	EXTERIOR
FBD	FIBERBOARD
F.B.O.	FURNISHED BY OTHERS
FC	FIRE CODE
FD	FLOOR DRAIN
FE	FIRE EXTINGUISHER
FEC	FIRE EXTINGUISHER CABINET
FFL	FINISH FLOOR LINE
FIN	FINISH
FIN FL	FINISH FLOOR
F.F.	FINISH FLOOR
F.O.S.	FACE OF STUD
GA	GAUGE
GALV	GALVANIZED
GC	GENERAL CONTRACTOR
GVL	GRAVEL
GYP	GYPSUM BOARD
GYP BD	GYPSUM BOARD
GWB	GYPSUM BOARD
HB	HOSE BIBB
HC	HANDICAPP
GNCP	HANDICAPP
HDW	HARDWARE
HM	HOLLOW METAL
HORIZ	HORIZONTAL
HT	HEIGHT
HVAC	HEATING, VENTILATION, AIR CONDITIONING
HWH	HOT WATER HEATER
ID	INSIDE DIAMETER
IE	THAT IS (EXAMPLE)
IN	INCH (ES)
INT	INTERIOR
INV	INVERT
JAN	JANITOR
JT	JOINT
LAM	LAMINATE
LAND'G	LANDING
LAV	LAVATORY
LTG	LIGHTING
MATL	MATERIAL
MAX	MAXIMUM
MECH	MECHANICAL
MFG	MANUFACTURER
MIN	MINIMUM
MEMB	MEMBRANE
MO	MASONRY OPENING
MT	METAL THRESHOLD
MTD	MOUNTED
MTL	METAL
MULL	MULLION
N	NORTH
NIC	NOT IN CONTRACT
NO, #	NUMBER
NTS	NOT TO SCALE
OA	OVERALL
OC	ON CENTER
OD	OUTSIDE DIAMETER
OFF	OFFICE
OFCI	OWNER FURNISHED, CONTRACTOR INSTALLED
OFOI	OWNER FURNISHED, OWNER INSTALLED
OPNG	OPENING
OPPHAND	OPPOSITE HAND
O.H.	OPPOSITE HAND
+\-	PLUS OR MINUS
P. LAM	PLASTIC LAMINATE
PART	PARTITION
PASS	PASSAGE
PC	PRECAST CONCRETE
PRE FAB	PREFABRICATED
PKG	PARKING
PL	PLATE
PL. LAM	PLASTIC LAMINATE
PLAM	PLASTIC LAMINATE
PLASS	PLASTER
PNL	PANEL
POL	POLISHED
PREP	PREPARATION
PT	POINT
PVC	POLYVINYL CHLORIDE
PVMT	PAVEMENT
QT	QUARRY TILE
QTY	QUANTITY
RAD	RADIUS
RD	ROOF DRAIN
REFRIG	REFRIGERATOR
REFIN	REINFORCE
REV	REVISIONS
RM	ROOM
RO	ROUGH OPENING
SCHED	SCHEDULE
SECT	SECTION
SHT	SHEET
SIM	SIMILAR
SKYLT	SKYLIGHT
SPEC	SPECIFICATION
SPK	SPEAKER
SPKR	SPEAKER
SQ	SQUARE
SQ FT	SQUARE FEET
S.F.	SQUARE FEET
SS	STAINLESS STEEL
ST	STEEL
STOR	STORAGE
STRUCT	STRUCTURE
SUSP CL	SUSPENDED CEILING
TEL	TELEPHONE
T & B	TOP AND BOTTOM
T & G	TONGUE AND GROOVE
THK	THICKNESS
TYP	TYPICAL
UNO	UNLESS NOTED OTHERWISE
UR	URINAL
VB	VAPOR BARRIER
VCT	VINYL COMPOSITE TILE
VERT	VERTICAL
VTR	VENT THRU ROOF
VWC	VINYL WALL COVERING
W/	WITH
WD	WOOD
WIN	WINDOW
WO	WITHOUT
W/O	WITHOUT
WP	WATERPROOFING
WT	WEIGHT
WTR	WATER
WWF	WELDED WIRE FABRIC

BID DOCUMENTS



CIVIL ENGINEERS
S.E. CIVIL ENGINEERING & SURVEYING
FAIRHOPE, AL - 251.990.6566

LANDSCAPE ARCHITECT
CPLA LANDSCAPE ARCHITECTURE
FAIRHOPE, AL - 855.539.5086

STRUCTURAL ENGINEERS
BARTER & ASSOCIATES, INC.
MOBILE, ALABAMA - 251.473.8354

ARCHITECT
WHLC ARCHITECTURE
FAIRHOPE, AL - 251.990.6200

ELECTRICAL/MECHANICAL/PLUMBING ENGINEERS
SMITH MECHANICAL
MOBILE, AL - 251.402.1364

PROPOSED SITE IMPROVEMENT PLANS

for

Transit Hub Pavilion

Loxley Municipal Park
Loxley, Alabama



CONTACTS

BUILDING DEPARTMENT
TOWN OF LOXLEY
MR. TYLER YORK
1089 S. HICKORY STREET
LOXLEY, ALABAMA 36551
251-964-5162

WATER & SEWER DEPARTMENT
LOXLEY PUBLIC WORKS
MR. ROBERT DAVIS
5151 S. MAGNOLIA STREET
LOXLEY, ALABAMA 36551
251-964-7644

ELECTRICAL DEPARTMENT
RIVIERA UTILITIES
MR. SCOTT SLIGH
P.O. DRAWER 2050
FOLEY, AL 36536
251-943-5001

PLANNING/ZONING DEPARTMENT
TOWN OF LOXLEY
MR. JONATHAN SMITH
1089 S. HICKORY STREET
LOXLEY, ALABAMA 36551
251-964-5162

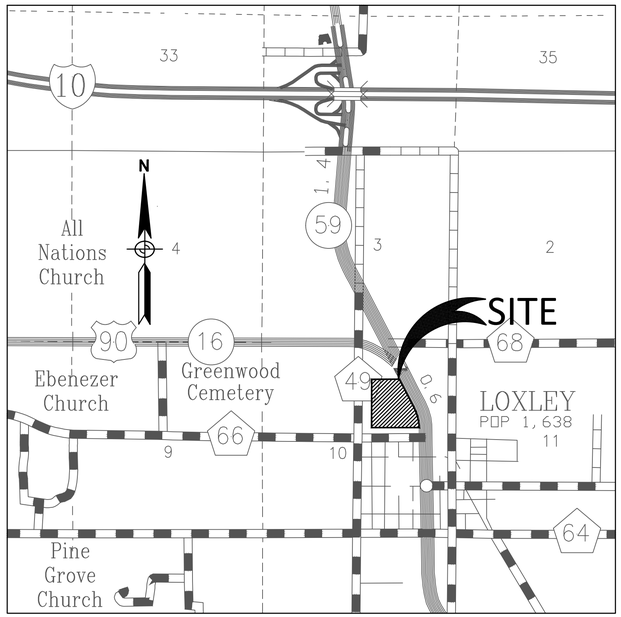

VICINITY MAP
N.T.S.

TABLE OF CONTENTS

	COVER
	EXISTING CONDITIONS PLAN
D01	DEMOLITION & TREE REMOVAL PLAN
C01	SITE PLAN
C02	GRADING & DRAINAGE PLAN
C03	EROSION & SEDIMENT CONTROL PLAN
C04	UTILITY PLAN
C05	CONSTRUCTION DETAILS
C06	CONSTRUCTION DETAILS
C07	CONSTRUCTION DETAILS

S.E. Civil
Engineering
& Surveying
9969 Windmill Road
Fairhope, AL 36532
251-990-6566

REVISIONS

REVISIONS:

NO.	DATE	APPR.	REVISION
0	06/22/2023	DRL	ISSUED FOR PERMIT

811
Know what's below.
Call before you dig.

ISSUED FOR PERMIT

THE PROFESSIONAL ENGINEERING SERVICES PROVIDED BY BROWN, MITCHELL & ALEXANDER, INC.,(BMA) ARE RELATIVE TO THESE FINAL DRAWINGS AS SHOWN. ANY MODIFICATIONS TO THE DRAWINGS & ASSOCIATED SPECIFICATIONS AS PREPARED BY BMA WITHOUT THE WRITTEN CONSENT OF BMA, SHALL RELIEVE BMA OF ANY & ALL LIABILITY AS A RESULT OF ANY SUCH MODIFICATIONS.

S:\3692 Loxley Municipal Park\CADD\WG\3692-SITE.dwg, 4/7/2020 3:32:20 PM, DWG To PDF.PC3

NOTE: NOT ALL GRADES ARE SHOWN FOR CLARITY

NORTH

SCALE: 1" = 50'

BEARINGS ARE BASED ON THE ALABAMA STATE PLANE GRID COORDINATE SYSTEM, WEST ZONE (0102), U.S. SURVEY FEET, DERIVED BY A TOPCON HIPER V SERIES G.P.S. RECEIVER UTILIZING THE REAL TIME NETWORK ADMINISTERED BY EARL DUDLEY, INC.
SCALE FACTOR = 0.99994086
CONVERGENCE ANGLE = (-) 00° 07' 52.69"
(AT CONTROL POINT #1)
VERTICAL DATUM: NAVD '88, GEOID 18

CONTROL POINTS

BM #1	DESCRIPTION
	IRON ROD SET
ELEV.	Northing 228921.88'
166.38	Easting 1887443.55'

BM #2	DESCRIPTION
	IRON ROD SET
ELEV.	Northing 228493.18'
166.51	Easting 1887424.44'

LEGEND

- TREE LINE
- CENTERLINE OF DITCH
- TOE OF DITCH BANK
- TOP OF DITCH BANK
- FENCE LINE
- SEWER MAIN
- WATER MAIN
- SEWER FORCE MAIN
- FIBER OPTIC
- GAS MAIN
- TELEPHONE LINE
- UNDERGROUND ELECTRIC LINE
- OVERHEAD ELECTRIC LINE
- DRAINAGE LINE
- CONTOUR LINE
- SEWER MANHOLE
- SEWER LIFT STATION
- SEWER CLEANOUT
- AIR RELEASE VALVE
- FIRE HYDRANT
- WATER VALVE
- WATER METER
- DRAINAGE INLET
- POWER POLE (WITH GUY)
- LAMP POST AND POWER/LIGHT POLE
- ELECTRIC METER
- ELECTRIC TRANSFORMER
- TELEPHONE PEDESTAL
- SIGN
- FLAG POLE
- BENCHMARK
- TREE (OTHER THAN PINE/CYRESS)
- PINE OR CYPRESS TREE
- SPOT GRADE

BROWN, MITCHELL & ALEXANDER, INC.
CONSULTING ENGINEERS
www.bmaengineers.com
401 Craven Road, Suite A, Gulfport, MS. 39507 (228)864-7612
131 Rue Magnolia Biloxi, MS. 39530 (228)436-7612
3221 Market Street Pascagoula, MS. 39567 (228)934-7612

CELEBRATING 50 YEARS

SEAL
ALABAMA LICENSED No. 32625 PROFESSIONAL ENGINEER DAVID B. ALEXANDER
4/1/2020

REV	DATE	BY

LOXLEY MUNICIPAL PARK
CHRISTIAN PREUS, LANDSCAPE ARCHITECT
LOXLEY, ALABAMA

EXISTING CONDITIONS PLAN

CAD	DME
ENG	DBA
DATE	03-30-20
SCALE	1"=50'
BMA#	3692
FILE	\DWG\3692-SITE

SHEET 1 OF 1

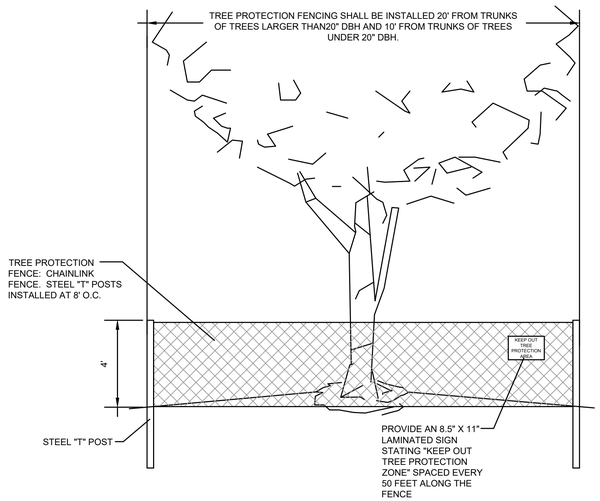

TREE BARRICADE

SCALE: NTS

NOTE:
TREE BARRICADE SHALL BE IN PLACE AT THE OUTER EDGE OF THE DRIP LINE OF THE TREE PRIOR TO ANY LANDSCAPE DISTURBANCE.

TREE REMOVAL NOTES

1. OBTAIN ALL PERMITS FROM STATE AND LOCAL AUTHORITIES PRIOR TO THE DEMOLITION AND REMOVAL OF ANY STRUCTURES, TREES, PAVING, OR INFRASTRUCTURE.
2. ALL DEBRIS, STRUCTURES, INFRASTRUCTURE, PIPES, POLES, CABLE, PAVING, AND ANY OTHER MATERIAL SHALL BE DISPOSED OF OFF-SITE AT A PERMITTED FACILITY.
3. CONTRACTOR MUST CALL THE APPROPRIATE UTILITY COMPANIES AT LEAST 72 HOURS BEFORE ANY EXCAVATION TO REQUEST EXACT FIELD LOCATION OF UTILITIES. IT SHALL BE THE RESPONSIBILITY OF THE CONTRACTOR TO RELOCATE ALL EXISTING UTILITIES WHICH CONFLICT WITH THE PROPOSED IMPROVEMENTS SHOWN ON THE PLANS.
4. CONTRACTOR SHALL BE RESPONSIBLE FOR ALL RELOCATIONS, INCLUDING BUT NOT LIMITED TO, ALL UTILITIES, STORM DRAINAGE, SIGNS, TRAFFIC SIGNALS & POLES, ETC. AS REQUIRED FOR DRIVE ENTRANCES AND SITE WORK. ALL WORK SHALL BE IN ACCORDANCE WITH GOVERNING AUTHORITIES SPECIFICATIONS AND SHALL BE APPROVED BY SUCH. ALL COST SHALL BE INCLUDED IN THE CONTRACTOR'S CONTRACT WITH THE OWNER.
5. ON-SITE BURIAL/DISPOSAL OF CONSTRUCTION AND DEMOLITION (C&D) WASTE IS PROHIBITED. CONSTRUCTION AND DEMOLITION WASTE MEANS BUILDING MATERIALS FROM CONSTRUCTION AND DEMOLITION OPERATIONS WHICH INCLUDE, BUT ARE NOT LIMITED TO: ASBESTOS-CONTAINING WASTE, WOOD, BRICKS, METAL, CONCRETE, WALL BOARD, PAPER, AND CARDBOARD.
6. INSTALL PERIMETER SEDIMENT BARRIERS AND TREE PROTECTION PRIOR TO DEMOLITION. REFER TO EROSION AND SEDIMENT CONTROL PLAN AND LANDSCAPE PLAN FOR DETAILS.
7. MAKE SAWCUTS AT AREAS WHERE PAVING IS TO REMAIN. CURBING SHOULD BE REMOVED TO AN EXISTING JOINT.

TREE REMOVAL LEGEND

REMOVAL — X

TREE PROTECTION FENCE — TP

TREE REMOVAL

TYPE	QTY
10" PINE	1
15" PINE	1
17" PINE	2
18" PINE	3
19" PINE	1
20" PINE	1
21" PINE	1
8" WATER OAK	1
6" MYRTLE	1

DEMOLITION LEGEND

PIPE REMOVAL

REMOVAL - ASPHALT/CONCRETE/GRAVEL

ASPHALT SAWCUT

DEMOLITION SYMBOLS

1. REMOVE STRUCTURE AND ALL ASSOCIATED WALKS. EXISTING PICNIC SHELTER TO BE SALVAGED. CITY WILL REPOSITION
2. REMOVE ASPHALT/CONCRETE WALK
3. REMOVE & RELOCATE LIGHT POLES, GRANITE MARKERS, UNDERGROUND POWER LINES AND TRANSFORMER (SEE ELECTRICAL PLANS). CONFIRM NEW LIGHT POLE & GRANITE MARKER LOCATIONS WITH ARCHITECT & CITY.
4. REMOVE AND RELOCATE BENCH & GRANITE MARKER. CONFIRM NEW LOCATION WITH CITY.

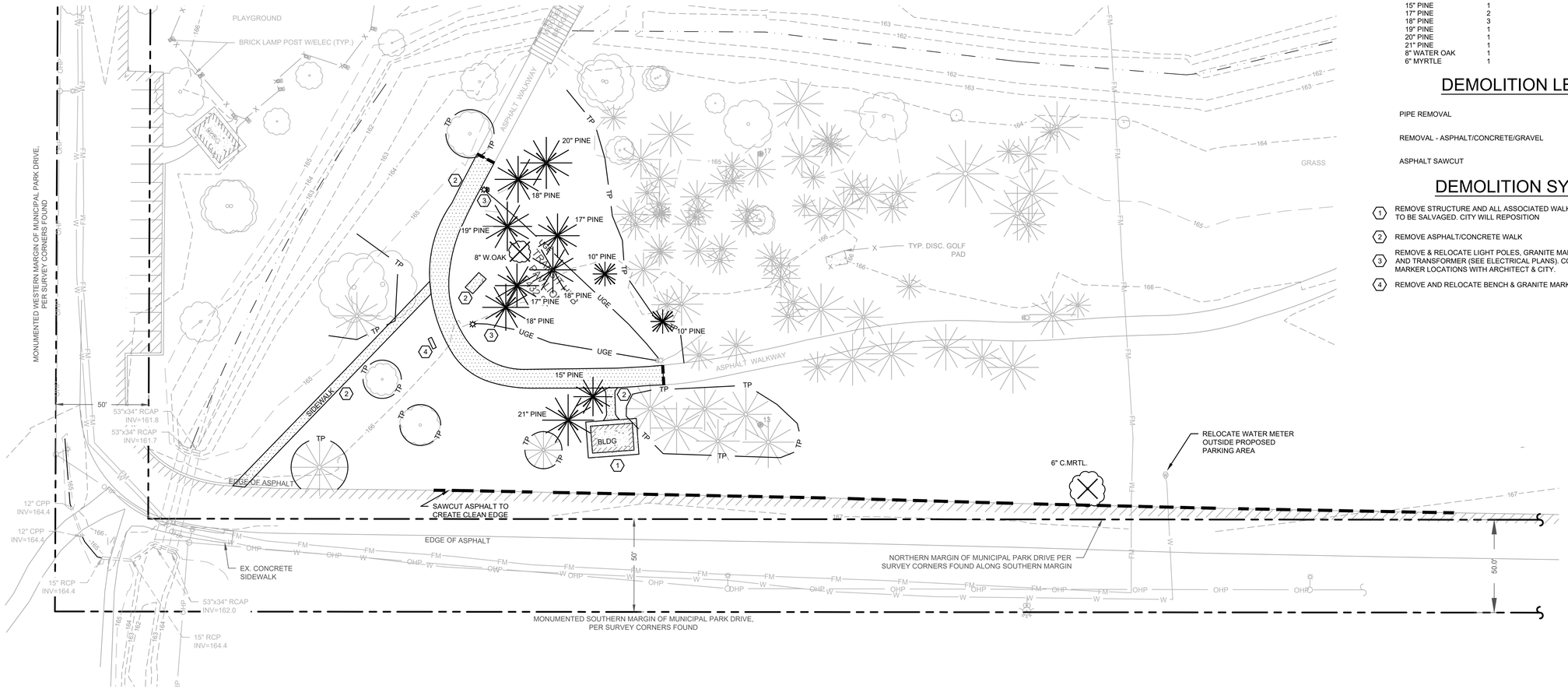

0 15 30 60 120
30 SCALE

811 Know what's below. Call before you dig.

WHLC | ARCHITECTURE

SE Civil Engineering & Surveying
9969 Windmill Road
Fairhope, AL 36532
251-990-6566

TRANSIT HUB PAVILION
LOXLEY MUNICIPAL PARK
LOXLEY, ALABAMA

IF NOT SIGNED WITH RED INK IT IS A COPY
ALABAMA LICENSED No. 25164 PROFESSIONAL ENGINEER DAVID R. CHARLTON
STATE OF ALABAMA

WASHER HILL LIPSCOMB CABANISS ARCHITECTURE, LLC
COPYRIGHT 2022
70 South Section St.
Fairhope, AL
251.990.6200

JOB No.	DATE
20221166	6/22/23
DRAWN	SCALE
DRL	1"=30'

DEMOLITION & TREE REMOVAL PLAN

SHEET
D01

PARKING DATA	
PARKING REQUIREMENT	SPACES
TOTAL REQUIRED =	N/A
TOTAL PROVIDED =	49

SITE PLAN LEGEND

EXISTING		PROPOSED
(X)	PARKING QUANTITY	(X)
	ACCESSIBLE PARKING SPACE	
	CONCRETE PAVING	
	ASPHALT PAVING	
	ASPHALT PATH	
	BRICK PAVERS	

SITE PLAN NOTES

1. ALL WORK AND MATERIALS SHALL COMPLY WITH THE CITY OF LOXLEY REGULATIONS AND CODES AS WELL AS O.S.H.A. AND ALDOT STANDARDS.
2. ALL ISLANDS SHALL BE LANDSCAPED.
3. ALL PAVED RADII ARE TO BE 4' UNLESS OTHERWISE NOTED.
4. ALL DIMENSIONS AND RADII ARE TO THE EDGE OF PAVEMENT UNLESS OTHERWISE NOTED.
5. EXISTING STRUCTURES WITHIN CONSTRUCTION LIMITS ARE TO BE ABANDONED, REMOVED OR RELOCATED AS NECESSARY. ALL COST SHALL BE INCLUDED IN THE BASE BID.
6. CONTRACTOR SHALL BE RESPONSIBLE FOR ALL RELOCATIONS, INCLUDING BUT NOT LIMITED TO ALL UTILITIES, STORM DRAINAGE, SIGNS, TRAFFIC SIGNALS & POLES, ETC. AS REQUIRED FOR SITE WORK. ALL WORK SHALL BE IN ACCORDANCE WITH GOVERNING AUTHORITIES SPECIFICATIONS AND SHALL BE APPROVED BY SUCH. ALL COST SHALL BE INCLUDED IN BASE BID.
7. THE SURVEY OF EXISTING CONDITIONS IS SHOWN WITHIN THESE PLANS. ALL EXISTING CONDITIONS SHALL BE VERIFIED TO BE TRUE AND ACCURATE PRIOR TO BEGINNING WORK.
8. REFER TO THE LANDSCAPING PLANS FOR PLANTING LOCATIONS AND ISLAND DETAILS.
9. PAINTED STRIPING SHALL BE BRIGHT AND CLEAR. STRIPES SHALL BE PER PLAN AND PAINTED ON CLEAN ASPHALT OR CONCRETE.
10. HANDICAP RAMPS AND PARKING STALLS SHALL BE PER ADA REQUIREMENTS AND LOCAL REGULATIONS.
11. THIS SITE IS ZONED R-1A (RESIDENTIAL SINGLE FAMILY).
12. TOTAL SITE ACREAGE =13 ACRES ±.
13. NOTIFY LOXLEY INSPECTIONS 24 HOURS BEFORE THE BEGINNING OF EVERY PHASE OF CONSTRUCTION.
14. THE CONTRACTOR SHALL BE RESPONSIBLE FOR OBTAINING ALL REQUIRED GOVERNMENTAL INSPECTIONS.
15. A COPY OF THE APPROVED LAND DISTURBANCE PLAN AND PERMIT SHALL BE PRESENT ON SITE WHENEVER LAND DISTURBANCE ACTIVITY IS IN PROGRESS.
16. CONSTRUCTION EQUIPMENT SHALL NOT BE PARKED IN REQUIRED R.O.W. AND MUST BE STORED WITHIN THE SITE.
17. DURING CONSTRUCTION, ACCESS ROADWAYS CONSTRUCTED OF AN ALL WEATHER SURFACE CAPABLE OF SUPPORTING 75,000 POUNDS GROSS WEIGHT SHALL BE PROVIDED. THE WIDTH OF THE ACCESS ROADWAY, DURING CONSTRUCTION, SHALL BE 20 FT PER STANDARD FIRE PREVENTION CODE, LATEST EDITION.
18. ALL NON-HANDICAP PARKING SPACE LINES WILL BE WHITE.
19. ALL TRAFFIC CONTROL SIGNS AND MARKINGS USED ON THE SITE WILL CONFORM WITH THE MANUAL ON UNIFORM TRAFFIC CONTROL DEVICES (MUTCD), FHWA, LATEST EDITION. REFERENCE THE SIGN CODES CONTAINED IN THE MUTCD FOR ALL TRAFFIC CONTROL SIGNS. NOTE THE COLOR AND SIZE OF ALL PAVEMENT MARKINGS, REFERENCING DETAILS IN ALDOT'S ROADWAY AND TRAFFIC DESIGN STANDARDS WHERE APPLICABLE.
20. NO "PROTECTED TREES" WILL BE REMOVED, DESTRUCTIVELY DAMAGED, MUTILATED, RELOCATED, DISFIGURED, DESTROYED, CUT DOWN, OR EXCESSIVELY PRUNED DURING CONSTRUCTION ACTIVITIES.
21. THE CONTRACTOR SHALL FAMILIARIZE THEMSELVES WITH ALL OF THE EXISTING CONDITIONS AT THE SITE; INCLUDING UTILITIES, SURFACES, ETC. AND SHALL BE FULLY RESPONSIBLE FOR ANY DAMAGES THEY CAUSE TO NEW AND EXISTING CONSTRUCTION, PROPERTY AND ANY UNAUTHORIZED DISRUPTION TO UTILITIES ON SITE AND TO ADJACENT PROPERTIES.
22. PRIOR TO CONSTRUCTION, EXISTING UTILITIES AT PROPOSED CONNECTIONS AND CROSSINGS SHALL BE FIELD EXCAVATED TO VERIFY LOCATIONS, ELEVATION AND SIZE. NOTIFY THE ENGINEER IMMEDIATELY WITH ANY DEVIATIONS OR CONFLICTS.
23. CONTRACTOR SHALL REFER TO THE ARCH. PLANS FOR EXACT LOCATIONS AND DIMENSIONS OF EXIT PORCHES; PRECISE BUILDING DIMENSIONS AND EXACT BUILDING UTILITY ENTRANCE LOCATIONS.
24. REFER TO STRUCTURAL PLANS FOR THE COLUMN GRID LAYOUT AND INFORMATION REQUIRED TO LAYOUT THE BUILDING WITHIN THE FOUNDATIONS.
25. NO CERTIFICATE OF OCCUPANCY WILL BE ISSUED UNTIL ALL SITE IMPROVEMENTS HAVE BEEN COMPLETED.
26. NO TOPOGRAPHIC SURVEY WAS PROVIDED IN THE AREA OF THE SIDEWALK EXTENSION ON THE SOUTH SIDE OF MUNICIPAL PARK DRIVE. CONCRETE SIDEWALK EXTENSION IN TO BE FIELD DESIGNED BY OTHERS. SIDEWALK SHALL BE CONSTRUCTED TO ALLOW POSITIVE DRAINAGE AWAY FROM ROADWAY, AND IN ACCORDANCE WITH ALL ADA AND TOWN OF LOXLEY REQUIREMENTS.

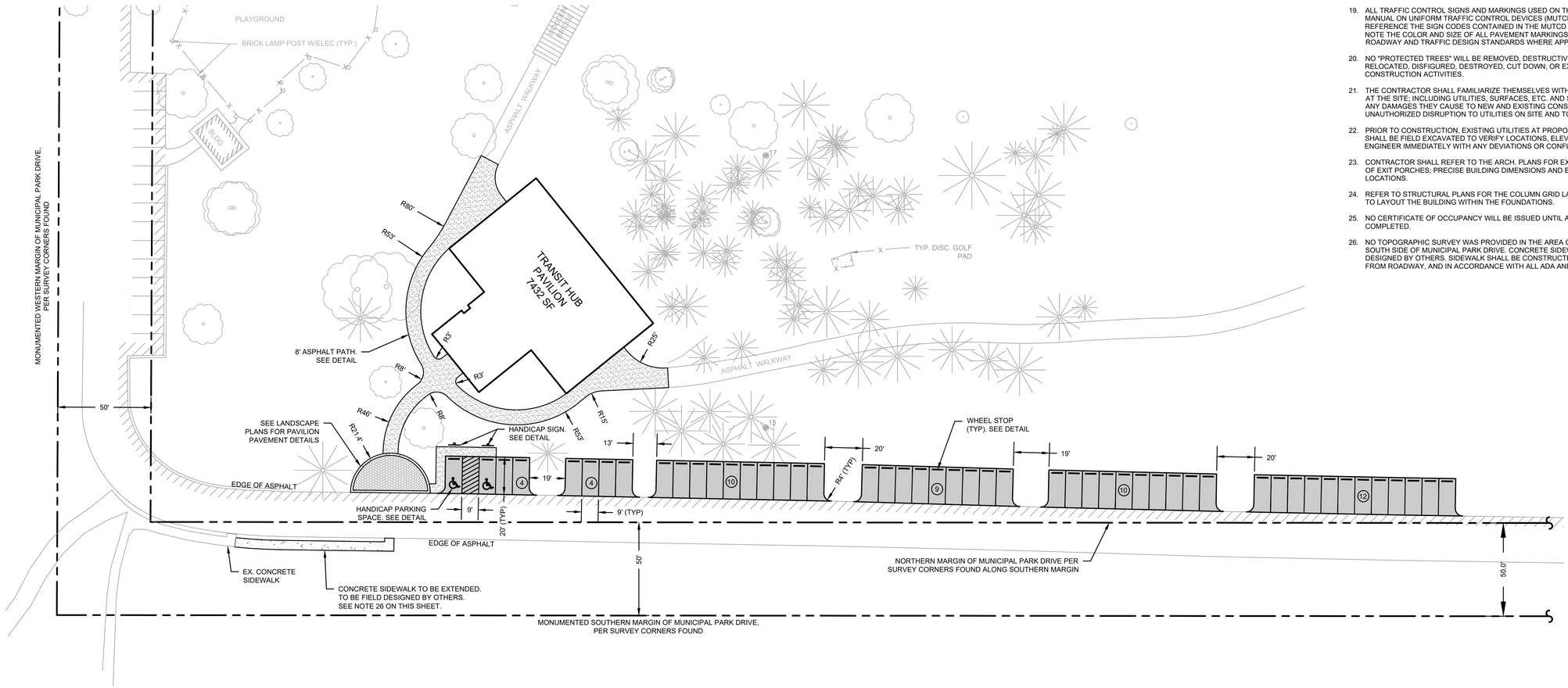

Know what's below. Call before you dig.

0 15 30 60 120
30 SCALE

WHLC | ARCHITECTURE

SE Civil Engineering & Surveying
9969 Windmill Road
Fairhope, AL 36532
251.990.6606

TRANSIT HUB PAVILION

LOXLEY MUNICIPAL PARK
LOXLEY, ALABAMA

STATE OF ALABAMA
DANIEL R. CHARLO
No. 51064
PROFESSIONAL ENGINEER
IF NOT SIGNED AND SEALED IT IS INVALID

WASHER HILL LIPSCOMB CABANISS ARCHITECTURE, LLC
COPYRIGHT 2022

70 South Section St.
Fairhope, AL
251.990.6200

JOB No. 20221166	DATE 6/22/23
DRAWN DRL	SCALE 1"=30'

SITE PLAN

SHEET
C01

GRADING & DRAINAGE PLAN LEGEND

EXISTING		PROPOSED
XXX	CONTOURS	XXX
+ XXX.XX	SPOT ELEVATION	XXX.XX
	MATCH EXISTING	XXX.XX M.E.

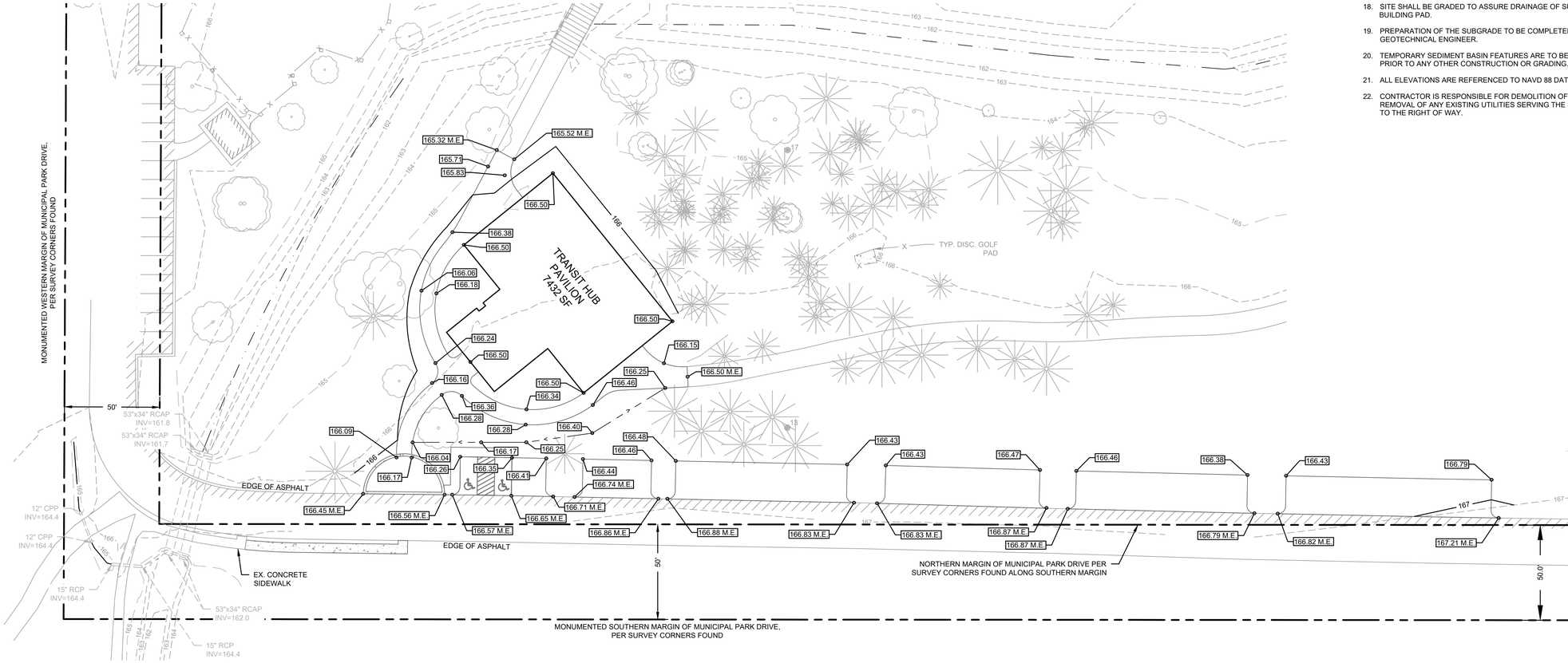

GRADING & DRAINAGE NOTES

1. THE CONTRACTOR MUST CALL THE APPROPRIATE UTILITY COMPANIES AT LEAST 72 HOURS BEFORE ANY EXCAVATION TO REQUEST EXACT FIELD LOCATION OF UTILITIES. IT SHALL BE THE RESPONSIBILITY OF THE CONTRACTOR TO RELOCATE ALL EXISTING UTILITIES WHICH CONFLICT WITH THE PROPOSED IMPROVEMENTS SHOWN ON THE PLANS.
2. ALL CUT OR FILL SLOPES SHALL BE 3:1 OR FLATTER.
3. ALL DISTURBED AREAS NOT OTHERWISE COVERED BY BUILDINGS OR PAVEMENT SHALL RECEIVE FOUR INCHES OF TOPSOIL AND STABILIZED PER THE LANDSCAPE PLAN.
4. ALL CAST IN PLACE CONCRETE TO HAVE A MIN. 28 DAY COMPRESSION STRENGTH OF 3000 P.S.I.
5. THE CONTOUR INTERVAL IS ONE FOOT OR AS SHOWN.
6. FIRM NO. 01003C0544M EFFECTIVE DATE APRIL 19, 2019, SHOWS THE PROPERTY TO BE SITUATED IN ZONE X.
7. UTILITY TRENCHES SHALL BE DE-WATERED AS RECOMMENDED BY THE GEOTECHNICAL ENGINEER AND THE SPECIFICATIONS. APPROVED MEASURES SHALL BE TAKEN TO ENSURE THE PROPER INSTALLATION OF THE PIPING SYSTEM. THE CONTRACTOR SHALL HOLD THE OWNER AND ENGINEER HARMLESS FOR ADDITIONAL COSTS FOR DE-WATERING AND BACKFILL LABOR & MATERIALS.
8. THE CONTRACTOR SHALL PROVIDE TO THE ENGINEER RECORD DRAWINGS OF AS-BUILT CONDITIONS FOR THE DEVELOPMENT OF THE SITE.
9. EXISTING INFORMATION IS SHOWN PER SURVEY BY BROWN, MITCHELL & ALEXANDER, INC.
10. ALL STRUCTURAL FILL AREAS TO BE CONSTRUCTED UNDER THE DIRECTION OF A SOILS ENGINEER.
11. GRADES NOT OTHERWISE INDICATED ON THE PLANS SHALL BE UNIFORM LEVELS OR SLOPES BETWEEN POINTS WHERE ELEVATIONS ARE GIVEN. ABRUPT CHANGES IN SLOPE SHALL BE WELL ROUNDED. ELEVATIONS REPRESENT FINAL GRADE.
12. ALL SILT BARRIERS SHALL BE PLACED AS ACCESS IS OBTAINED DURING CLEARING. NO GRADING SHALL BE DONE UNTIL THE TREE PROTECTION, SAVE AREAS, AND SILT BARRIER INSTALLATIONS ARE CONSTRUCTED.
13. THE LAND DISTURBANCE PERMIT MUST BE DISPLAYED ON SITE AT ALL TIMES DURING CONSTRUCTION AND IN PLAIN VIEW FROM A PUBLIC ROAD OR STREET.
14. ALL O.S.H.A. CONSTRUCTION REQUIREMENTS SHALL BE STRICTLY ADHERED TO.
15. CONTRACTOR IS RESPONSIBLE FOR MAINTAINING PROPER TRAFFIC CONTROL FOR PUBLIC SAFETY ADJACENT TO THE CONSTRUCTION SITE.
16. THE CONTRACTOR SHALL FURNISH, ERECT AND MAINTAIN BARRICADES, WARNING SIGNS, LIGHTS AND OTHER TRAFFIC CONTROL DEVICES IN CONFORMITY WITH THE FEDERAL HIGHWAY ADMINISTRATION MANUAL ON UNIFORM TRAFFIC CONTROL DEVICES FOR STREETS AND HIGHWAYS, LATEST EDITION.
17. CONTRACTOR TO CLEAN OUT ACCUMULATED SILT IN THE STORM SYSTEM AT THE END OF CONSTRUCTION WHEN DISTURBED AREAS HAVE BEEN STABILIZED.
18. SITE SHALL BE GRADED TO ASSURE DRAINAGE OF SURFACE WATER AWAY FROM THE BUILDING PAD.
19. PREPARATION OF THE SUBGRADE TO BE COMPLETED UNDER THE DIRECTION OF A GEOTECHNICAL ENGINEER.
20. TEMPORARY SEDIMENT BASIN FEATURES ARE TO BE CONSTRUCTED AND FULLY OPERATIONAL PRIOR TO ANY OTHER CONSTRUCTION OR GRADING.
21. ALL ELEVATIONS ARE REFERENCED TO NAVD 88 DATUM.
22. CONTRACTOR IS RESPONSIBLE FOR DEMOLITION OF EXISTING STRUCTURES INCLUDING REMOVAL OF ANY EXISTING UTILITIES SERVING THE STRUCTURE. UTILITIES ARE TO BE REMOVED TO THE RIGHT OF WAY.

0 15 30 60 120
30 SCALE

811 Know what's below. Call before you dig.

WHLC | ARCHITECTURE

SE Civil Engineering & Surveying
9969 Windmill Road
Fairhope, AL 36532
251-990-6566

TRANSIT HUB PAVILION
LOXLEY MUNICIPAL PARK
LOXLEY, ALABAMA

IF NOT SIGNED IN BLUE INK IT IS A COPY
ALABAMA LICENSED No. 51064 PROFESSIONAL ENGINEER DAVID R. CHARD

WASHER HILL LIPSCOMB CABANISS ARCHITECTURE, LLC
COPYRIGHT 2022
70 South Section St.
Fairhope, AL
251.990.6200

JOB No. 20221166	DATE 6/22/23
DRAWN DRL	SCALE 1"=30'

GRADING AND DRAINAGE PLAN

SHEET
C02

EROSION CONTROL PRACTICES

CODE	PRACTICE
CEP	CONSTRUCTION EXIT PAD
SB	SEDIMENT BARRIER
MU	MULCHING
TS	TEMPORARY SEEDING
PS	PERMANENT SEEDING

CONSTRUCTION SEQUENCE - PHASE 1

1. INSTALL TREE PROTECTION FENCING PER TREE PROTECTION ORDINANCE.
2. REMOVE VEGETATION ONLY IN AREAS OF THE PERIMETER SEDIMENT BARRIERS AND CONSTRUCTION EXIT.
3. INSTALL THE CONSTRUCTION EXIT PER DETAILS.
4. INSTALL PERIMETER SEDIMENT BARRIERS PER DETAILS.
5. REQUEST BMP & TREE PROTECTION INSPECTION PRIOR TO CLEARING.
6. ONCE INSPECTION IS COMPLETE AND APPROVED, CLEARING & SITE WORK CAN BEGIN (PHASE 2).

CONSTRUCTION SEQUENCE - PHASE 2

1. PERFORM CLEARING & ROUGH GRADING ON THE LOT AND ESTABLISH COVER ON AREAS WHEN BROUGHT TO GRADE.
2. INSTALL DRAINAGE FEATURES AND UTILITIES.
3. INSTALL STONE BASE.
4. ESTABLISH VEGETATION ON AREAS NOT IMPACTED BY PAVING OPERATIONS.

CONSTRUCTION SEQUENCE - PHASE 3

1. INSTALL PAVING AND FINAL LANDSCAPING.
2. CALL FOR AN INSPECTION FROM THE QCP.
3. ONCE THE QCP HAS CERTIFIED THAT ALL AREAS ARE STABILIZED, REMOVE BMPS AND TREE PROTECTION.
4. STABILIZE ANY AREAS DISTURBED BY BMP AND TREE PROTECTION REMOVAL.

USDA SOIL SURVEY CLASSIFICATIONS

Bb - BIBB & MANTACHIE SOILS, LOCAL ALLUVIUM - HSG B/D
MaA - MALBIS FINE SANDY LOAM, 0 TO 2 PERCENT SLOPES - HSG C
MaB - MALBIS FINE SANDY LOAM, 2 TO 5 PERCENT SLOPES - HSG C
NoA - NORFOLK FINE SANDY LOAM, 0 TO 2 PERCENT SLOPES - HSG B

EROSION CONTROL NOTES

1. THE EXISTING SITE IS LANDSCAPED MUNICIPAL PARK AREA.
2. CONTACT DAVID KING 251-990-6566.
3. AREA TO BE DISTURBED = 0.78 ACRES
4. ALL VEGETATION SHALL BE PLANTED AND MAINTAINED PER THE ALABAMA HANDBOOK FOR EROSION CONTROL, SEDIMENT CONTROL AND STORMWATER MANAGEMENT ON CONSTRUCTION SITES AND URBAN AREAS (ALABAMA HANDBOOK).
5. ALL EROSION CONTROL MEASURES SHALL BE PER THE DIRECTION OF THE ENGINEER, SOIL AND WATER CONSERVATION COMMITTEE OFFICER, AND THE FEDERAL E.P.A. GUIDELINES FOR THE NPDES PROGRAM.
6. ABSOLUTELY NO SEDIMENT SHALL BE PERMITTED TO LEAVE THE SITE DURING CONSTRUCTION. IF HEAVY RAINS OR UNUSUAL SITE CONDITIONS RESULT IN THE POLLUTION OF ROADWAYS OR ADJACENT PARCELS THEN THE GRADING CONTRACTOR SHALL CLEAN THE DISTURBED AREAS IMMEDIATELY AND RESTORE THE AREAS TO THE ORIGINAL CONDITION WITHIN 24 HOURS.
7. ALL DISTURBED AREAS SHALL BE TEMPORARILY AND PERMANENTLY SEEDED WITH "SOUTH" TYPE SEEDINGS PER THE ALABAMA HANDBOOK.
8. ADDITIONAL EROSION CONTROL MEASURES MAY BE REQUIRED BY THE GOVERNING OFFICIALS. IT IS THE RESPONSIBILITY OF THE GRADING CONTRACTOR TO BE INTIMATE WITH THE LOCAL EROSION CONTROL LAWS AND TO REFLECT THIS KNOWLEDGE IN HIS/HER ACTIONS AND QUOTATIONS.
9. REFERENCE THE CONSTRUCTION SEQUENCE FOR THE RELATIONSHIP BETWEEN THE INSTALLATION OF EROSION CONTROL FEATURES AND GENERAL CONSTRUCTION.
10. THE ESCAPE OF SEDIMENT FROM THE SITE SHALL BE PREVENTED BY THE INSTALLATION OF EROSION AND SEDIMENT CONTROL MEASURES AND PRACTICES PRIOR TO, OR CONCURRENT WITH LAND DISTURBING ACTIVITIES.
11. ALL EROSION AND SEDIMENT CONTROL MEASURES WILL BE CHECKED DAILY AND ANY DEFICIENCIES NOTED WILL BE CORRECTED BY THE END OF EACH DAY. ADDITIONAL EROSION CONTROL MEASURES WILL BE INSTALLED IF DEEMED NECESSARY AFTER ON-SITE INSPECTION BY THE GOVERNING OFFICIAL OR ENGINEER OF RECORD.
12. ALL SILT BARRIERS SHALL BE PLACED AS ACCESS IS OBTAINED DURING CLEARING. NO GRADING SHALL BE DONE UNTIL THE SEDIMENT BARRIERS HAVE BEEN CONSTRUCTED.
13. CONTRACTOR SHALL REMOVE EROSION CONTROL DEVICES AFTER PERMANENT GRASSING IS IN PLACE AND ESTABLISHED.
14. THE CONSTRUCTION EXIT PAD SHALL BE MAINTAINED IN A CONDITION WHICH WILL PREVENT TRACKING OR FLOW OF MUD ONTO PUBLIC RIGHT-OF-WAY. THIS MAY REQUIRE PERIODIC TOP DRESSING WITH STONE, AS CONDITIONS DEMAND, AND REPAIR AND/OR CLEAN OUT OF ANY STRUCTURES USED TO TRAP SEDIMENT. ALL MATERIALS SPILLED, DROPPED, WASHED, OR TRACKED FROM VEHICLE OR SITE ONTO PUBLIC ROADWAY MUST BE REMOVED IMMEDIATELY.
15. DISTURBED AREAS LEFT IDLE FOR TEN DAYS OR LONGER ARE TO BE SEEDED AND MULCHED.
16. SEDIMENT / EROSION CONTROL DEVICES MUST BE CHECKED AFTER EACH STORM EVENT. EACH DEVICE IS TO BE MAINTAINED OR REPLACED IF SEDIMENT ACCUMULATION HAS REACHED 1/3 OF THE CAPACITY OF THE DEVICE.
17. MAINTENANCE OF ALL SOIL EROSION AND SEDIMENTATION CONTROL MEASURES AND PRACTICES, WHETHER TEMPORARY OR PERMANENT, SHALL BE AT ALL TIMES THE RESPONSIBILITY OF THE OWNER'S CONTRACTOR.
18. THE CONTRACTOR SHALL PREVENT THE LOSS OF SEDIMENT DUE TO WIND VIA WATERING DRY SOILS. CAUTION SHOULD BE TAKEN TO ENSURE THAT THE SITE IS NOT OVER WATERED.
19. THE SITE IS TO BE CLEARED AND GRADED AS TO MINIMIZE THE AMOUNT OF SOIL EXPOSED AT ONE TIME.
20. EROSION CONTROL MEASURES SHALL BE MAINTAINED AT ALL TIMES. IF FULL IMPLEMENTATION OF THE APPROVED PLAN DOES NOT PROVIDE FOR EFFECTIVE EROSION CONTROL, ADDITIONAL EROSION AND SEDIMENT CONTROL MEASURES SHALL BE IMPLEMENTED TO CONTROL OR TREAT THE SEDIMENT SOURCE.
21. CONTRACTOR IS RESPONSIBLE FOR MONITORING DOWNSTREAM CONDITIONS THROUGHOUT THE CONSTRUCTION PERIOD AND CLEARING ANY DEBRIS AND SEDIMENT CAUSED BY CONSTRUCTION.
22. BMP'S SHALL BE INSTALLED AS PER THE ALABAMA HANDBOOK STANDARDS.
23. BMP'S SHALL BE INSTALLED WITH MINIMAL CLEARING ACTIVITY.
24. REFER TO THE LANDSCAPE PLANS FOR FINAL STABILIZATION MEASURES.
25. ALL CUT AND FILL SLOPES MUST BE SURFACE ROUGHENED AND VEGETATED WITHIN 7 DAYS OF THEIR CONSTRUCTION.
26. ALL FILL SLOPES HAVE SILT FENCE AT THE TOE OF SLOPES.
27. EXISTING TREES, TO BE SAVED, SHALL BE PROTECTED FROM CONSTRUCTION ACTIVITIES. CARE SHALL BE TAKEN IN ALL GRADING ACTIVITIES TO REMAIN OUTSIDE THE DRIP LINES OF EXISTING TREES. ALL TREE PROTECTION FENCING TO BE INSPECTED DAILY AND REPLACED OR REPAIRED AS NEEDED.
28. TREE PROTECTION DEVICES MUST BE INSTALLED AND INSPECTED PRIOR TO ANY CLEARING, GRUBBING, OR GRADING.
29. CONTRACTOR TO CLEAN OUT ACCUMULATED SEDIMENT IN DRAINAGE DITCHES, & CULVERTS AT THE END OF CONSTRUCTION WHEN DISTURBED AREAS HAVE BEEN STABILIZED.
30. SEDIMENT STORAGE INDICATORS MUST BE INSTALLED IN SEDIMENT STORAGE STRUCTURES, INDICATING THE 1/3 FULL VOLUME.

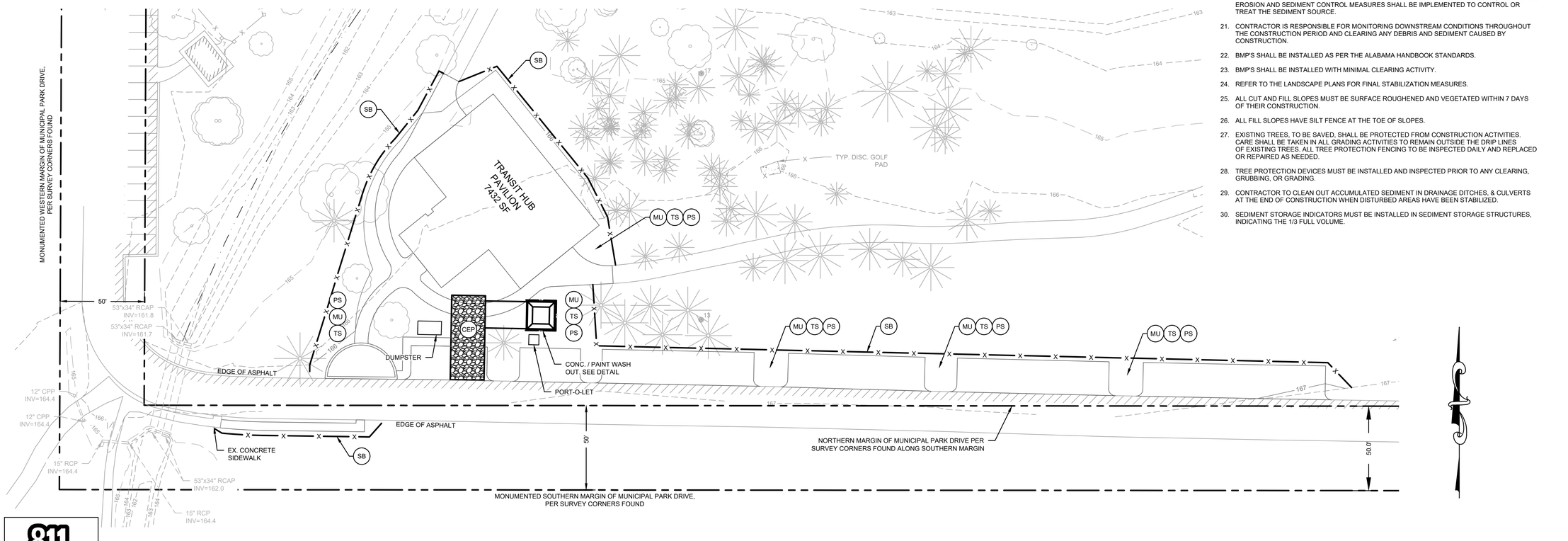

Know what's below. Call before you dig.

0 15 30 60 120
30 SCALE

WHLC | ARCHITECTURE

SE Civil Engineering & Surveying
9969 Windmill Road
Fairhope, AL 36532
251-990-6566

TRANSIT HUB PAVILION
LOXLEY MUNICIPAL PARK
LOXLEY, ALABAMA

IF NOT SIGNED IN BLUE INK IT IS INVALID AND A COPY
STATE OF ALABAMA
LICENSED
DAVID R. CHARLTON
No. 31064
PROFESSIONAL ENGINEER
SURVEYOR

WASHER HILL LIPSCOMB CABANISS ARCHITECTURE, LLC
COPYRIGHT 2022
70 South Section St.
Fairhope, AL
251.990.6200

JOB No. 20221166	DATE 6/22/23
DRAWN DRL	SCALE 1"=30'

EROSION & SEDIMENT CONTROL PLAN

SHEET
C03

UTILITY PLAN LEGEND

EXISTING		PROPOSED
W	WATER	W
OHP	OVERHEAD POWER	OHP
UGE	UNDERGROUND ELECTRIC	UGE
SS	SANITARY SEWER	SS
FM	FORCE MAIN	FM
	FIRE HYDRANT ASSEMBLY	FH
	GRINDER PUMP	
	VALVE	
W	WATER METER	W
	CLEAN OUT	

UTILITY NOTES

1. THE PROPOSED WATER SERVICE SHALL BE INSTALLED BY A LICENSED PLUMBING CONTRACTOR AND CERTIFIED TO BE IN ACCORDANCE WITH PLANS AND SPECIFICATIONS OF LOXLEY PUBLIC WORKS (LPW) PRIOR TO COMPLETION OF THE PROJECT. ALL PIPING, VALVES, FITTINGS AND DEVICES SHALL BE IN ACCORDANCE WITH LPW SPECIFICATIONS.
2. ALL NEW UTILITY SERVICES SHALL BE INSTALLED PER THE SPECIFICATIONS, DETAILS, AND REQUIREMENTS OF LPW AND OTHER UTILITY PROVIDERS. THE CONTRACTOR SHALL BE INTIMATE WITH THE LOCAL CODES AND REQUIREMENTS AND SHALL BE RESPONSIBLE FOR THE COMPLIANCE OF ALL SYSTEMS WITH THESE CODES.
3. THE SANITARY SEWER LINE SHALL BE TESTED FOR INFILTRATION/EXFILTRATION IN ACCORDANCE WITH LPW STANDARDS & SPECIFICATIONS.
4. CONTRACTOR TO PROVIDE SURVEYED AS-BUILT OF WATER AND SEWER SYSTEMS AS INSTALLED PRIOR TO REQUESTING A PUNCH LIST.
5. ALL PVC PIPE SHALL BE MARKED USING DETECTABLE UNDERGROUND UTILITY MARKER TAPE TAPE SHALL BE A MINIMUM OF 5 MILS THICK AND 3 INCHES IN WIDTH. MINIMUM TENSILE STRENGTH SHALL BE 35 POUNDS AND TAPE SHALL ELONGATE NOT LESS THAN 80 PERCENT BEFORE BREAKING. TAPE SHALL BE PERMANENTLY IMPRINTED WITH AN APPROPRIATE LEGEND TO IDENTIFY THE CONTENTS OF THE PIPE.
6. ALL PVC PIPE INSTALLATIONS REQUIRE THAT METALIZED MARKER TAPE BE BURIED IN THE BACKFILL APPROXIMATELY 12 INCHES ABOVE THE PIPE. THE TAPE SHALL BE ATTACHED TO FITTINGS, VALVES, HYDRANTS, ETC. TO PROVIDE A LOCATION ABOVE GROUND TO TRANSMIT THE SIGNAL TO THE TAPE WITHOUT HAVING TO DIG DOWN TO THE PIPE.
7. THRUST BLOCKING AND PIPE RESTRAINTS SHALL BE INSTALLED AND SIZED IN ACCORDANCE WITH NFPA-24. THESE RESTRAINTS SHALL BE APPROVED BY THE ENGINEER AND LPW PRIOR TO BACKFILLING AND TESTING.
8. WATER MAINS UNDER 4" SHALL CONFORM TO THE REQUIREMENTS OF ASTM D2241. PIPE SHALL HAVE A MINIMUM PRESSURE RATING OF 200 PSI, SDR 21 OR HEAVIER. WATER MAINS 4"-12" SHALL CONFORM TO THE REQUIREMENTS OF AWWA C900, SDR 18 OR HEAVIER.
9. THE CONTRACTOR IS SPECIFICALLY CAUTIONED THAT THE LOCATION AND/OR ELEVATION OF EXISTING UTILITIES AS SHOWN ON THESE PLANS IS BASED ON RECORDS OF THE VARIOUS UTILITY COMPANIES, AND WHERE POSSIBLE, MEASUREMENTS TAKEN IN THE FIELD. THE INFORMATION IS NOT TO BE RELIED ON AS BEING EXACT OR COMPLETE. THE CONTRACTOR MUST CALL THE APPROPRIATE UTILITY COMPANIES AT LEAST 72 HOURS BEFORE ANY EXCAVATION TO REQUEST EXACT FIELD LOCATION OF UTILITIES. IT SHALL BE THE RESPONSIBILITY OF THE CONTRACTOR TO RELOCATE ALL EXISTING UTILITIES WHICH CONFLICT WITH THE PROPOSED IMPROVEMENTS SHOWN ON THE PLANS.
10. ALL O.S.H.A. CONSTRUCTION REQUIREMENTS SHALL BE STRICTLY ADHERED TO.
11. CONTRACTOR IS RESPONSIBLE FOR MAINTAINING PROPER TRAFFIC CONTROL FOR PUBLIC SAFETY ADJACENT TO THE CONSTRUCTION SITE.
12. THE CONTRACTOR SHALL FURNISH, ERECT AND MAINTAIN BARRICADES, WARNING SIGNS, LIGHTS AND OTHER TRAFFIC CONTROL DEVICES IN CONFORMITY WITH THE FEDERAL HIGHWAY ADMINISTRATION MANUAL ON UNIFORM TRAFFIC CONTROL DEVICES FOR STREETS AND HIGHWAYS, LATEST EDITION.
13. THE CONTRACTOR WILL PROVIDE AND INSTALL ALL SECONDARY WIRING AND CONDUIT FROM THE TRANSFORMER TO THE LOCATION OF THE METERS.

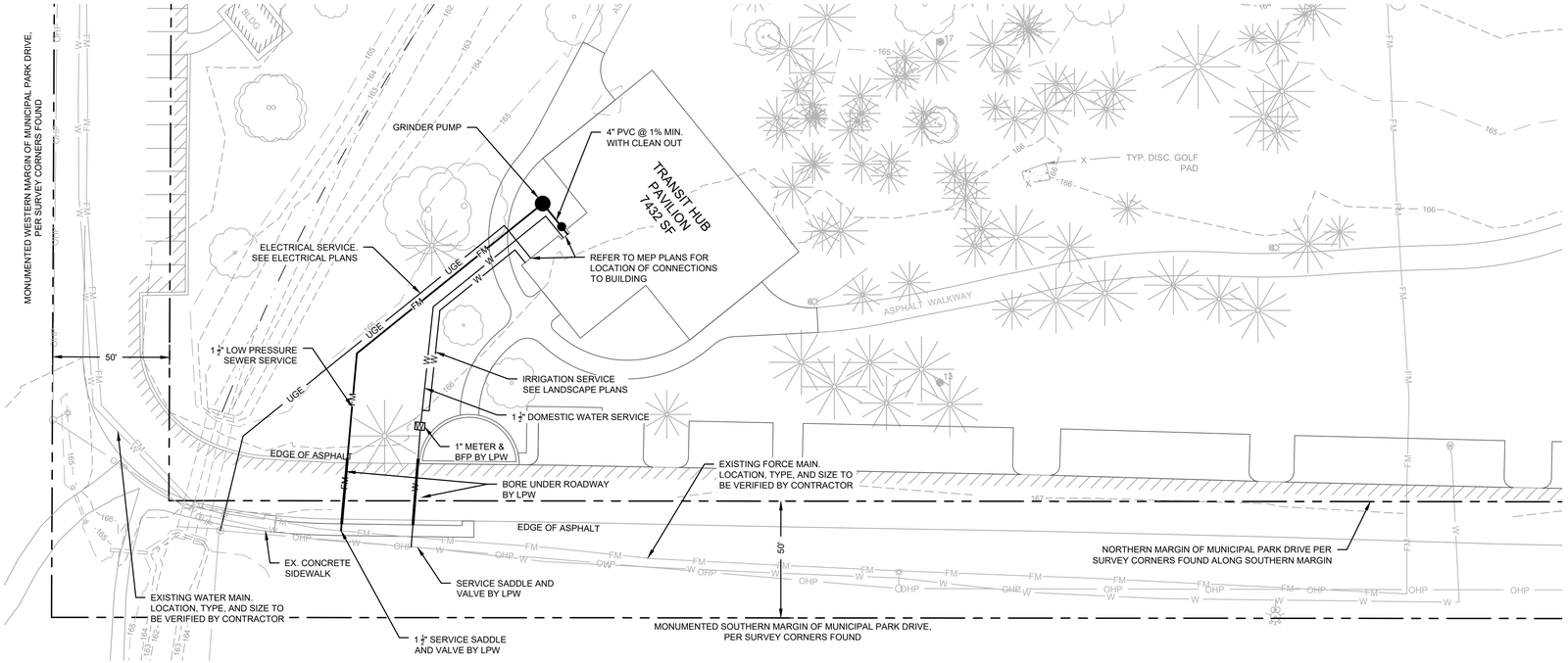



0 15 30 60 120
30 SCALE

811
Know what's below.
Call before you dig.

WHLC | ARCHITECTURE

SE Civil Engineering & Surveying
9969 Windmill Road
Fairhope, AL 36532
251-990-6566

TRANSIT HUB PAVILION
LOXLEY MUNICIPAL PARK
LOXLEY, ALABAMA

IF NOT SIGNED WITH RED INK IT IS A COPY
STATE OF ALABAMA
LICENSED
6/22/23
No. 51064
PROFESSIONAL ENGINEER
DAVID R. RICHARD
STAMP

WASHER HILL LIPSCOMB CABANISS ARCHITECTURE, LLC

COPYRIGHT 2022

70 South Section St.
Fairhope, AL
251.990.6200

JOB No. 20221166	DATE 6/22/23
DRAWN DRL	SCALE 1"=30'

UTILITY PLAN

SHEET
C04

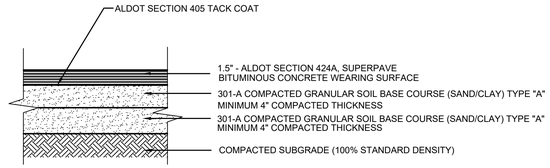

NOTE:
PAVING SECTION / DESIGN TO BE VERIFIED BY GEOTECHNICAL ENGINEER. S.E. CIVIL EXPRESSES NO WARRANTY FOR THE USE OF THIS PAVING SECTION. ALL ASPHALT MATERIAL AND PAVING OPERATIONS SHOULD MEET APPLICABLE SPECIFICATIONS OF THE ASPHALT INSTITUTE AND ALABAMA DEPARTMENT OF TRANSPORTATION'S STANDARD SPECIFICATIONS FOR HIGHWAY CONSTRUCTION - 2012 EDITION.

ASPHALT PATH DETAIL

SCALE: NTS

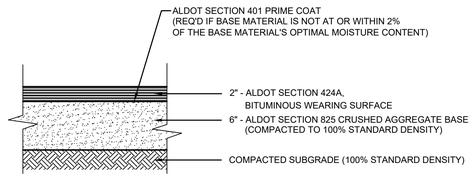

NOTE: PAVING SECTION / DESIGN TO BE VERIFIED BY GEOTECHNICAL ENGINEER. S.E. CIVIL EXPRESSES NO WARRANTY FOR THE USE OF THIS PAVING SECTION. ALL ASPHALT MATERIAL AND PAVING OPERATIONS SHOULD MEET APPLICABLE SPECIFICATIONS OF THE ASPHALT INSTITUTE AND ALABAMA DEPARTMENT OF TRANSPORTATION.

ASPHALTIC CEMENT PAVEMENT DETAIL (PARKING)

SCALE: NTS

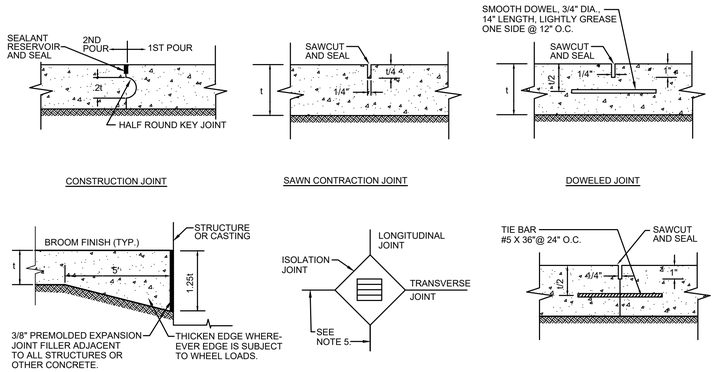

NOTE:

1. CONSTRUCTION JOINTS ARE REQUIRED BETWEEN ALL POURS SEPARATED BY MORE THAN 30 MINUTES TIME.
2. PLACE LONGITUDINAL CONSTRUCTION JOINT AT CENTERLINE OF ROADWAYS WHEN PAVEMENT IS WIDER THAN 12'.
3. TWELVE FEET (12') SPACING BETWEEN CONTRACTION JOINTS OR AS SHOWN ON PLANS.
4. FILL JOINTS TO WITHIN 1/8" OF SURFACE WITH A SELF-LEVELING JOINT SEALANT.
5. WHEN A JOINT FALLS WITHIN 5' OF A MANHOLE, LIGHT POLE BASE, OR OTHER STRUCTURE, SHORTEN ONE OR MORE PANELS ON EITHER SIDE OF STRUCTURE TO ALLOW CONTROL JOINTS TO FALL AT STRUCTURE.
6. CONCRETE PAVEMENTS SHALL BE CONSTRUCTED, JOINTED, REINFORCED, AND FINISHED TO MEET ACI 330 AND PORTLAND CEMENT ASSOCIATION (PCA) GUIDELINES.

CONCRETE PAVEMENT JOINTS DETAILS

SCALE: NTS



NOTES:

1. ALL SIDEWALKS SHALL BE 4" THICK CONCRETE.
2. CONTRACTION JOINTS SHALL BE SPACED AT 5'-0" FOR SIDEWALKS 5' WIDE AND LESS.
3. FOR SIDEWALKS 5' TO 8' WIDE, SPACING OF CONTRACTION JOINTS SHALL BE EQUAL TO WIDTH.
4. FOR SIDEWALKS OVER 8' WIDE, SPACE CONTRACTION JOINTS AS SHOWN ON DRAWINGS
5. CONTRACTION JOINTS SHALL BE 1" DEEP AND EDGED WITH 1/8" RADIUS.
6. FOR SIDEWALKS 10' OR GREATER OR WHEN SIDEWALKS ABUT PARKING WHERE THERE IS NOT A CURB, THICKEN WALK TO 12" IN 3'.
7. PROVIDE 1/2" EXPANSION MATERIAL WHERE SIDEWALK ABUTS CONCRETE STRUCTURE.
8. A LAYER OF #15 FELT IS REQUIRED BETWEEN WALK AND ADJACENT PARALLELING CONCRETE CURB.
9. WWF SHALL BE UTILIZED TO REINFORCE THE SIDEWALKS.

TYPICAL SIDEWALK DETAIL

SCALE: NTS

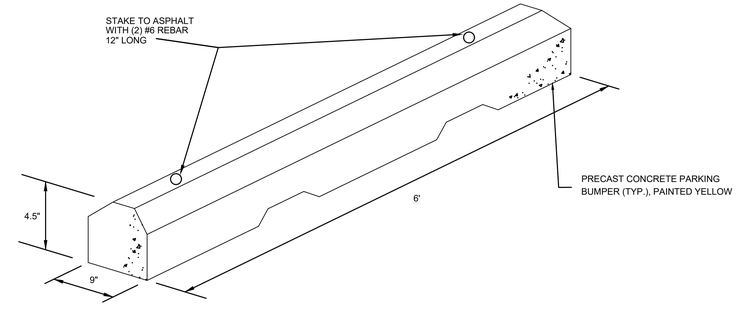

WHEEL STOP DETAIL

SCALE: NTS

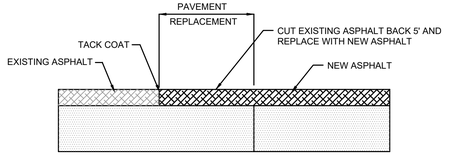

PAVEMENT JOINT DETAIL

SCALE: NTS

811 Know what's below. Call before you dig.

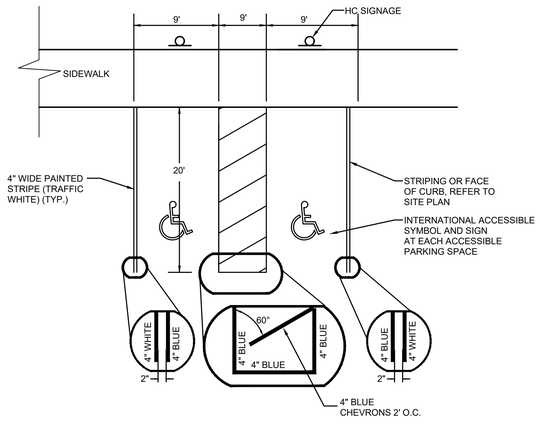

NOTES:

1. DIMENSIONS ARE TO THE CENTERLINE OF MARKINGS.
2. CRITERIA FOR PAVEMENT MARKINGS ONLY, NOT PUBLIC SIDEWALK CURB RAMP LOCATIONS. FOR RAMP LOCATIONS REFER TO PLANS.
3. BLUE PAVEMENT MARKINGS SHALL BE TINTED TO MATCH SHADE 15180 OF FEDERAL STANDARDS 595A.
4. DIAGONAL OR PERPENDICULAR PARKING SPACES SHALL BE A MINIMUM OF NINE (9) FEET WIDE MEASURED FROM CENTER TO CENTER OF THE BLUE DEMARCATION LINES.

HANDICAP PARKING DETAIL

SCALE: NTS

NOTE: ACCESSIBLE PARKING SIGN SHALL CONFORM WITH CURRENT STATE AND LOCAL CODES AND REGULATIONS.

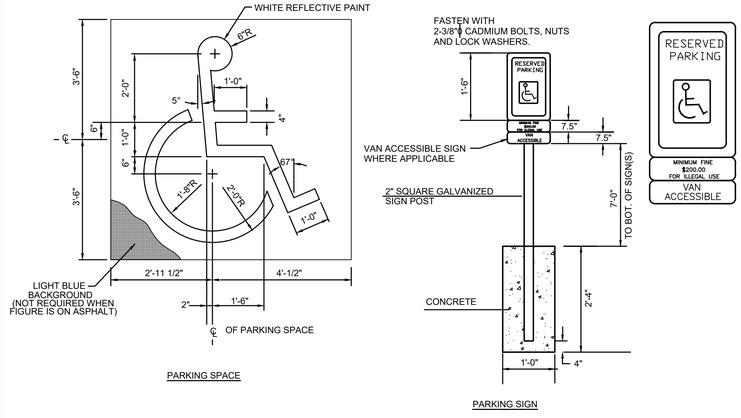

HANDICAP SIGNAGE DETAIL

SCALE: NTS

WHLC | ARCHITECTURE

SE Civil Engineering & Surveying
9969 Windmill Road
Fairhope, AL 36532
251.990.6566

TRANSIT HUB PAVILION
LOXLEY MUNICIPAL PARK
LOXLEY, ALABAMA

ALABAMA LICENSED PROFESSIONAL ENGINEER NO. 25064 DAVID R. CHASTAIN

IF NOT SIGNED IN BLUE INK, THIS DOCUMENT IS A COPY

WASHER HILL LIPSCOMB CABANISS ARCHITECTURE, LLC
COPYRIGHT 2022

70 South Section St.
Fairhope, AL
251.990.6200

JOB No.	DATE
20221166	6/22/23
DRAWN	SCALE
DRL	N.T.S.

CONSTRUCTION DETAILS

SHEET

C05

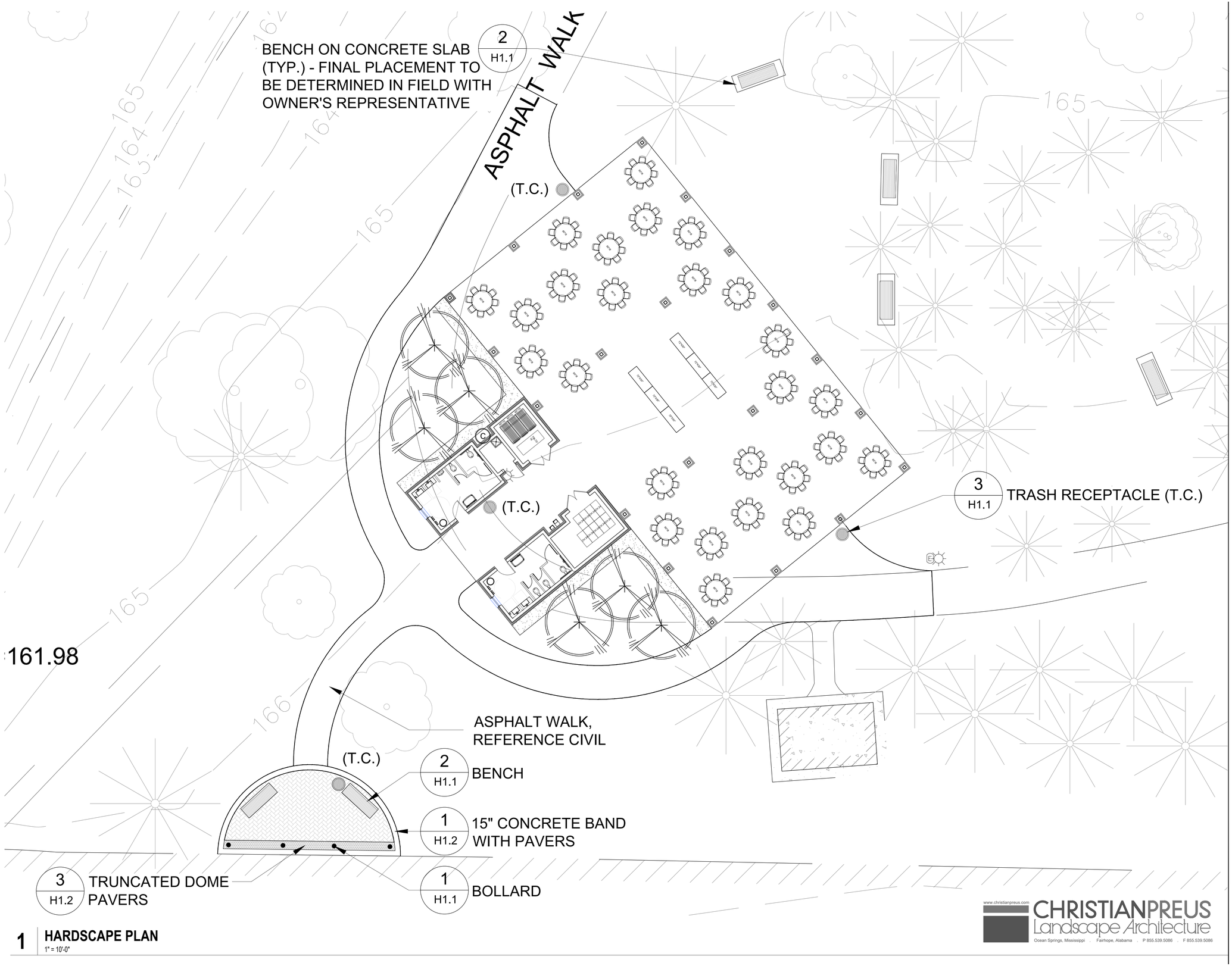

1 HARDSCAPE PLAN
1" = 10'-0"

www.christianpreus.com
CHRISTIANPREUS Landscape Architecture
Ocean Springs, Mississippi . Fairhope, Alabama . P 855.539.5086 . F 855.539.5086

general notes

keyplan

WHLC | ARCHITECTURE

TRANSIT HUB PAVILION

LOXLEY MUNICIPAL PARK
LOXLEY, ALABAMA

STATE OF ALABAMA
CHRISTIAN HARRIS PREUS
REGISTERED LANDSCAPE ARCHITECT
11.16.23

washer hill lipscomb cabaniss architecture, llc
copyright 2022

70 south section st fairhope, al
t 251.990.6200

21-205
NOVEMBER 16th, 2023
BID SET

HARDSCAPE PLAN

H1.0

RELIANCE FOUNDRY MODEL R-8911 OR APPROVED EQUAL
- (4) FIXED BOLLARD
- (2) REMOVABLE BOLLARDS
- STAINLESS FINISH

SUBMIT COLOR CHART FOR FINAL APPROVAL

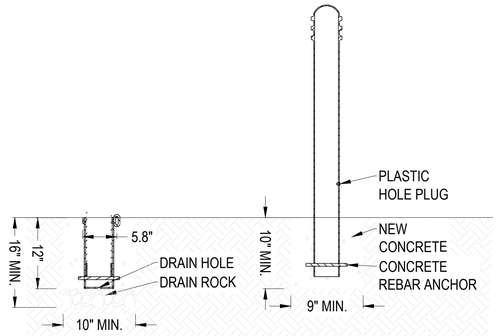

NOTES:
1. INSTALLATION TO BE COMPLETED IN ACCORDANCE WITH MANUFACTURER'S SPECIFICATIONS.
2. ALL DIMENSIONS ARE CONSIDERED TRUE AND REFLECT MANUFACTURER'S SPECIFICATIONS.
3. DO NOT SCALE DRAWING.
4. CONTRACTOR'S NOTE: FOR PRODUCT AND COMPANY INFORMATION VISIT www.CADdetails.com/info REFERENCE NUMBER 3382-226.

1 BOLLARD DETAIL - FIXED INSTALLATION

N.T.S.

MANUF.: VICTOR STANLEY, INC (OR APPROVED EQUAL)
1-800-368-2573
MODEL: LILY SERIES
- HOT DIP GALVANIZED POWDER COAT

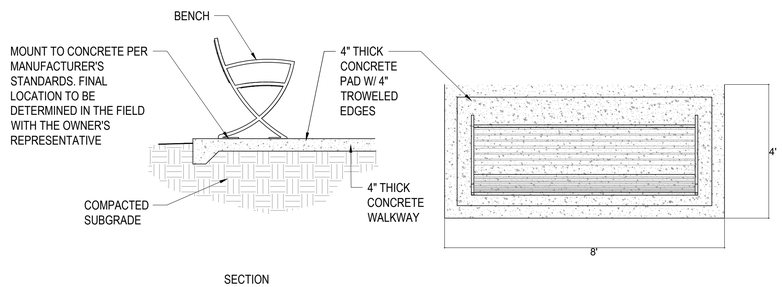

SECTION

2 BENCH DETAIL

NOT TO SCALE

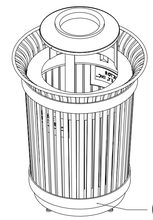

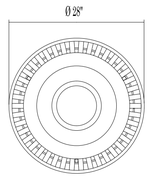

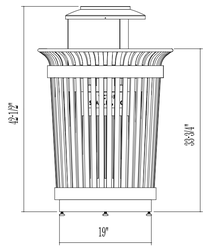

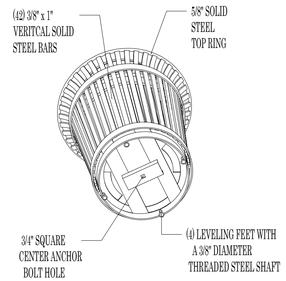

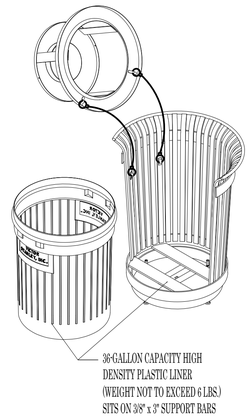

AVAILABLE OPTIONS:

POWDER COATING
10 STANDARD COLORS, CUSTOM COLORS (INCLUDING THE RAL RANGE)

CUSTOM PLAQUES & DECALS
AVAILABLE WITH STEEL PLAQUES IN VARIOUS SIZES AND PRESSURE SENSITIVE VINYL OUTDOOR DECALS.

LIDS
STANDARD WITH TAPERED FORMED LID. AVAILABLE WITH OPTIONAL S-2A FORMED DOME, S-2A FORMED DOME WITH STAINLESS STEEL ASHTRAY (AS SHOWN), AND DS-32 FORMED DOME WITH SELF CLOSING DOOR

SECURITY
LID IS SECURED WITH VINYL COATED GALVANIZED STEEL AIRCRAFT CABLE. CABLE IS LOOPED AROUND ATTACHMENT BRACKETS AND CRIMPED IN PLACE.

NOTES:
1. DRAWINGS NOT TO SCALE. DO NOT SCALE DRAWINGS.
2. ALL FABRICATED METAL COMPONENTS ARE STEEL SHOTBLASTED, ETCHED, PHOSPHATIZED, PREHEATED, AND ELECTROSTATICALLY POWDER-COATED WITH T.G.I.C. POLYESTER POWDER COATINGS. PRODUCTS ARE FULLY CLEANED AND PRETREATED, PREHEATED AND COATED WHILE HOT TO FILL CREVICES AND BUILD FILM COATING. COATED PARTS ARE THEN FULLY CURED TO COATING MANUFACTURER'S SPECIFICATIONS. THE THICKNESS OF THE RESULTING FINISH AVERAGES 8-10 MILS (200-250 MICRONS).
3. THIS VICTOR STANLEY, INC. PRODUCT MUST BE PERMANENTLY AFFIXED TO THE GROUND. CONSULT YOUR LOCAL CODES FOR REGULATIONS.
4. VICTOR STANLEY, INC., PLASTIC INNER LINERS ARE MOLDED ON TOOLING DESIGNED FOR AND OWNED BY VICTOR STANLEY, INC. THEY OFFER MAXIMUM CAPACITY AND STRENGTH WITH LIGHTWEIGHT CONSTRUCTION USING CRITICAL MOLDED RIBS, INTEGRAL HANDHOLDS, AND HIGH-STRENGTH MATERIALS. THIS MINIMIZES HANDLING DIFFICULTY AND FACILITATES EASY EMPTYING AND STORAGE WHILE AFFORDING LONG SERVICE LIFE.
5. ANCHOR BOLT(S) NOT PROVIDED BY VICTOR STANLEY, INC.
6. FOR HIGH SALT ABUSIVE CLIMATES, HOT DIP GALVANIZING BEFORE POWDER COATING IS AVAILABLE. SEE WRITTEN SPECIFICATIONS FOR DETAILS.
7. ALL SPECIFICATIONS ARE SUBJECT TO CHANGE. CONTACT MANUFACTURER FOR DETAILS.
8. THIS PRODUCT IS SHIPPED FULLY ASSEMBLED.

P.O. DRAWER 330 · DUNKIRK, MD 20754 USA
TOLL FREE: (800) 368-2573 (USA & CANADA)
TEL (301) 855-8300 · FAX (410) 257-7579
WEB SITE: HTTP://WWW.VICTORSTANLEY.COM

THIS PRODUCT IS COVERED BY U.S. PATENT D417,0(

3 TRASH RECEPTACLE DETAIL

NOT TO SCALE

www.christianpreus.com
CHRISTIANPREUS
Landscape Architecture
Ocean Springs, Mississippi . Fairhope, Alabama . P 855.539.5086 . F 855.539.5086

general notes

keyplan

WHLC | ARCHITECTURE

TRANSIT HUB PAVILION

LOXLEY MUNICIPAL PARK
LOXLEY, ALABAMA

STATE OF ALABAMA
CHRISTIAN
PREUS
REG. NO.
REGISTERED LANDSCAPE ARCHITECT
11.22

washer hill lipscomb cabaniss
architecture, llc
copyright 2022
70 south section st fairhope, al
t 251.990.6200

21-205
NOVEMBER 16th, 2023
BID SET

HARDSCAPE DETAILS

H1.1

NOTE:
PAVER SHALL BE PINE HALL BRICK - ENGLISH EDGE FULL RANGE, 80MM. THE CONTRACTOR SHALL PROVIDE A MOCK-UP PAVER PATTERN FOR OWNER AND OWNER'S REPRESENTATIVE'S APPROVAL

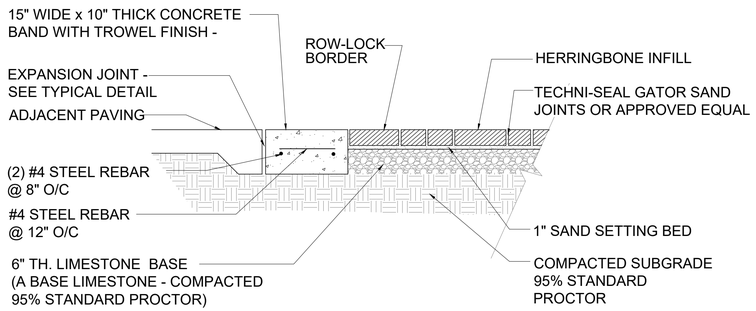

1 BRICK PAVER W/ CONCRETE BAND PLAZA DETAIL

NOT TO SCALE

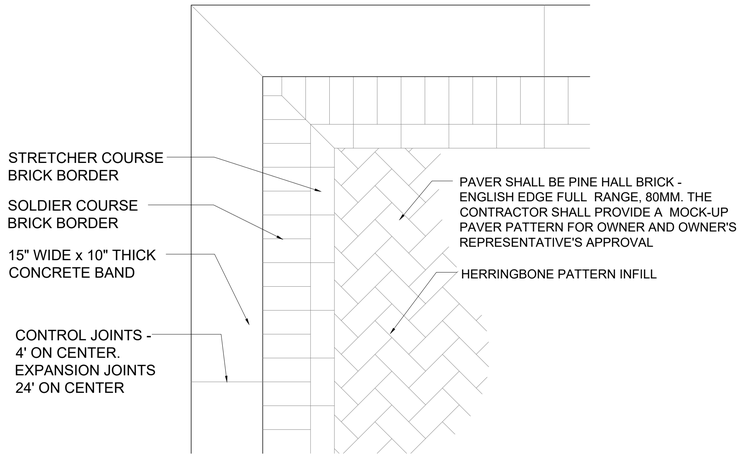

2 BRICK PAVER W/ CONCRETE BAND PLAZA DETAIL

NOT TO SCALE

ADA TRUNCATED PAVERS BY "PAVESTONE", WWW.PAVESTONEATLANTA.COM, "ADA PAVER", OR APP'D. EQ., SUBMIT COLOR CHART FOR APPROVAL. PAVERS ARE TO BE SET ON 1" SAND SETTING BED W/1/2" JOINTS

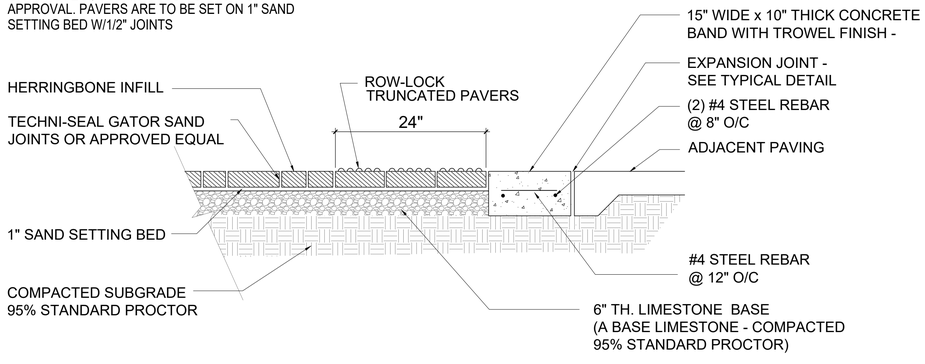

3 TRUNCATED DOME PAVERS

NOT TO SCALE

www.christianpreus.com
CHRISTIANPREUS Landscape Architecture
Ocean Springs, Mississippi . Fairhope, Alabama . P 855.539.5086 . F 855.539.5086

general notes

keyplan

WHLC | ARCHITECTURE

TRANSIT HUB PAVILION

LOXLEY MUNICIPAL PARK
LOXLEY, ALABAMA

STATE OF ALABAMA
REGISTERED LANDSCAPE ARCHITECT
CHRISTIAN PREUS
NUMBER
11.16.23

washer hill lipscomb cabaniss architecture, llc
copyright 2022

70 south section st fairhope, al
t 251.990.6200

21-205
NOVEMBER 16th, 2023
BID SET

HARDSCAPE DETAILS

H1.2

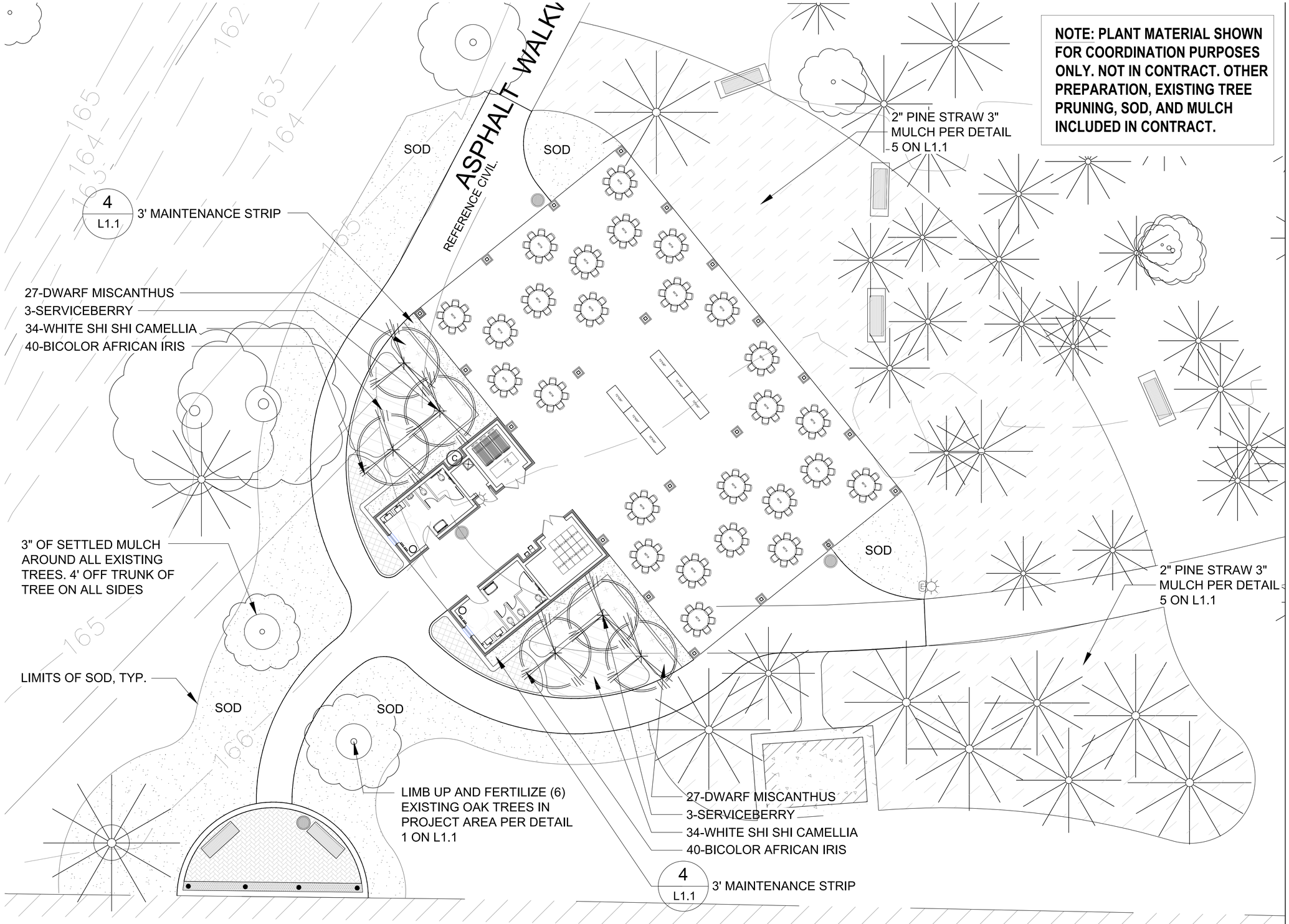

1 **LANDSCAPE PLAN**
1" = 10'-0"

www.christianpreus.com
CHRISTIANPREUS Landscape Architecture
Ocean Springs, Mississippi . Fairhope, Alabama . P 855.539.5086 . F 855.539.5086

general notes

keyplan

WHLC | ARCHITECTURE

TRANSIT HUB PAVILION

LOXLEY MUNICIPAL PARK
LOXLEY, ALABAMA

STATE OF ALABAMA
CHRISTIAN PAUL PREUS
REGISTERED LANDSCAPE ARCHITECT
11.16.23

washer hill lipscomb cabaniss architecture, llc
copyright 2022

70 south section st fairhope, al
t 251.990.6200

21-205
NOVEMBER 16th, 2023
BID SET

LANDSCAPE PLAN

L1.0

EXISTING TREE NOTES:
- PRE AND POST CONSTRUCTION FERTILIZATION OF EVERY EXISTING TREE SHALL BE ACCOMPLISHED BY THE CONTRACTOR BY METHODS USED BY NATIONAL TREE PRESERVATION 662-269-2414 OR APPROVED EQUAL. PROOF OF TREATMENTS ON ALL TREES SHALL BE REQUIRED IN ORDER TO RECEIVE SUBSTANTIAL COMPLETION.
- CONTRACTOR SHALL COORDINATE WITH THE CITY REGARDING ANY PERMITS FOR TREE PRUNING.
- THIS DETAIL IS FOR ALL EXISTING LIVE OAKS IN THE PROJECT AREA - COORDINATE WITH OWNER'S REPRESENTATIVE IN THE FIELD PRIOR TO PRUNING.
- A CERTIFIED ARBORIST MUST ACCOMPLISH THE SUGGESTED PRUNING ALONG WITH THE REMOVAL OF ANY DEAD OR DISEASED LIMBS.

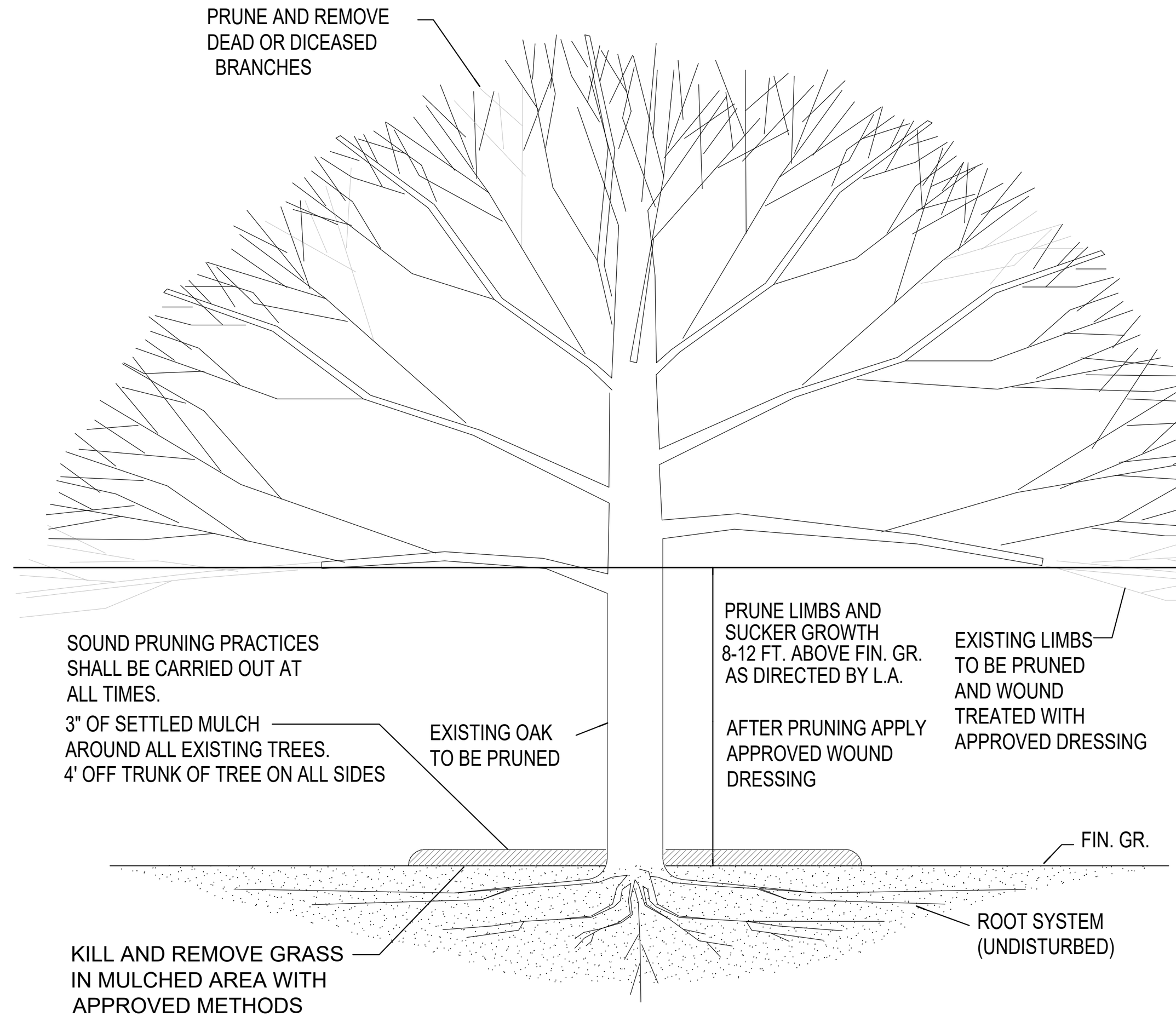

1 EXISTING TREE PRUNING & FERTILIZATION DETAIL (ALL EXISTING TREES)
NOT TO SCALE

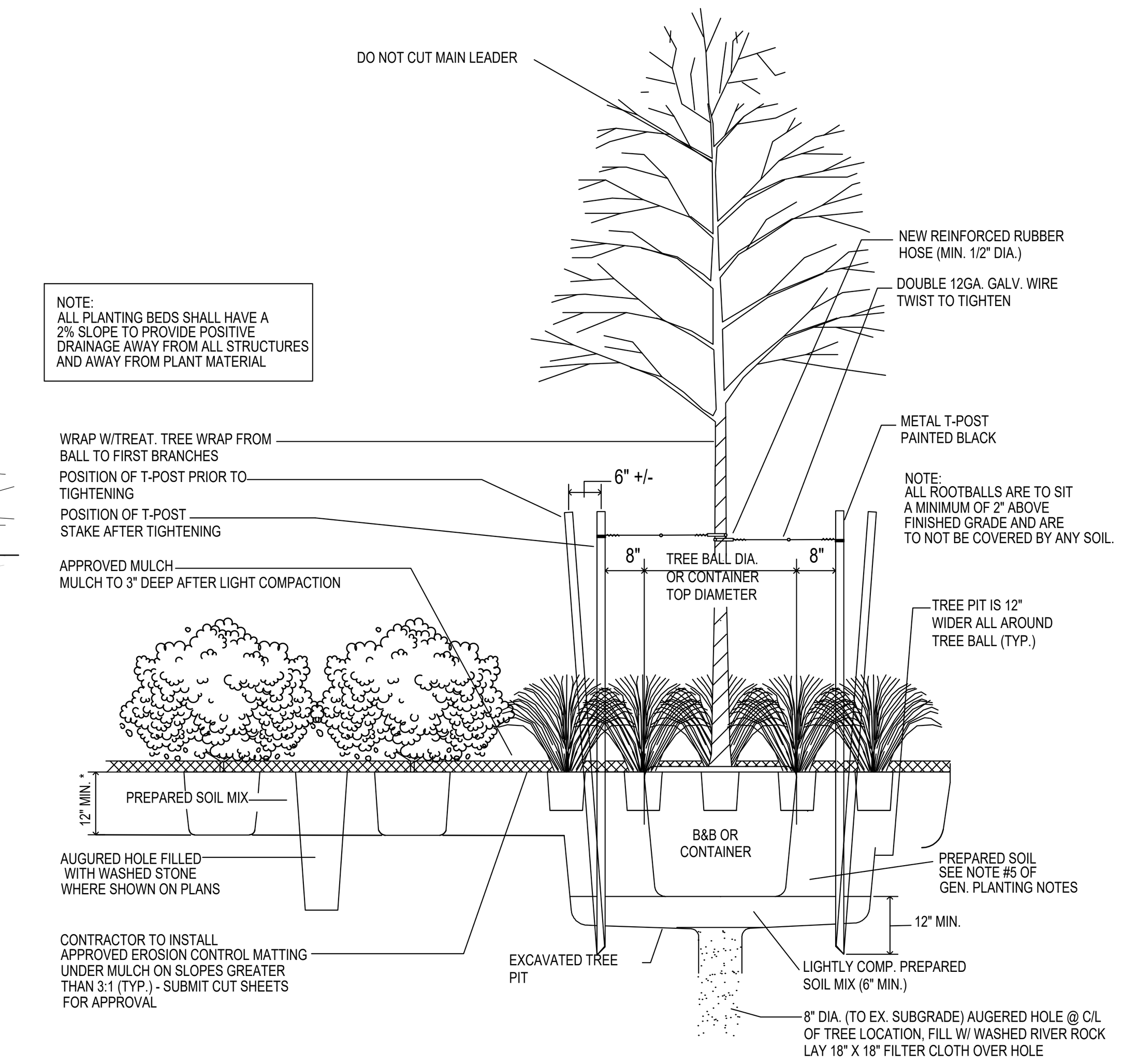

2 TYPICAL PLANTING SECTION IN BED AREAS
NOT TO SCALE

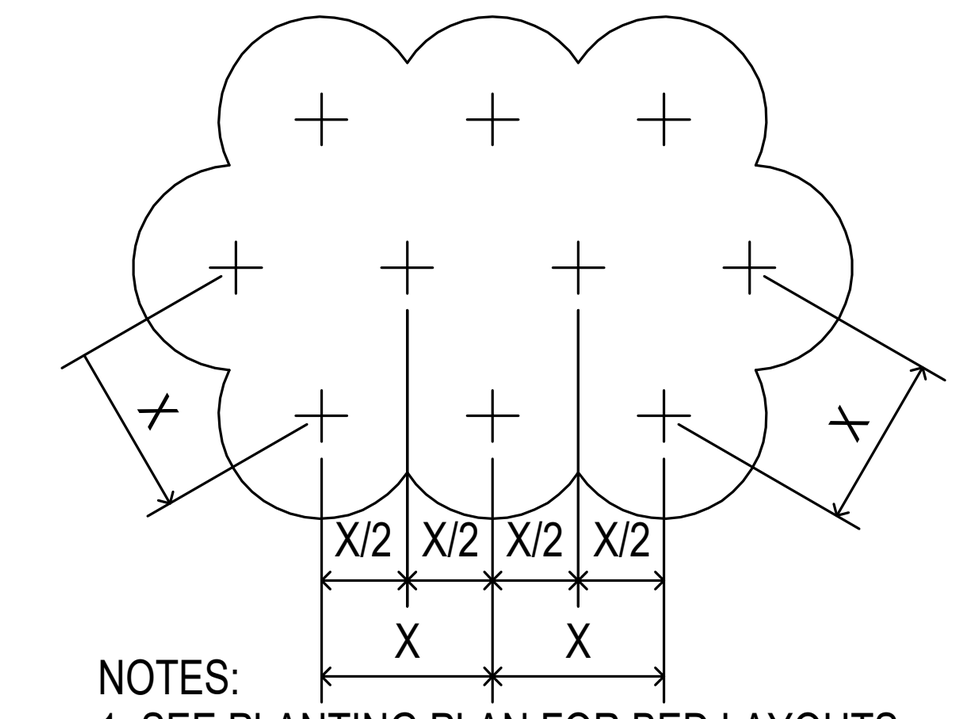

NOTES:
1. SEE PLANTING PLAN FOR BED LAYOUTS.
2. ROWS SHALL BE STRAIGHT & PARALLEL UNLESS BED AREA FOR PARTICULAR PLANT IS SHOWN IN A CIRCULAR OR IRRREGULAR AREA, THEN AS DIRECTED BY LANDSCAPE ARCHITECT.
3. SEE "PLANT USE LIST" FOR PLANT SPACING.

3 PLANT SPACING DETAIL
NOT TO SCALE

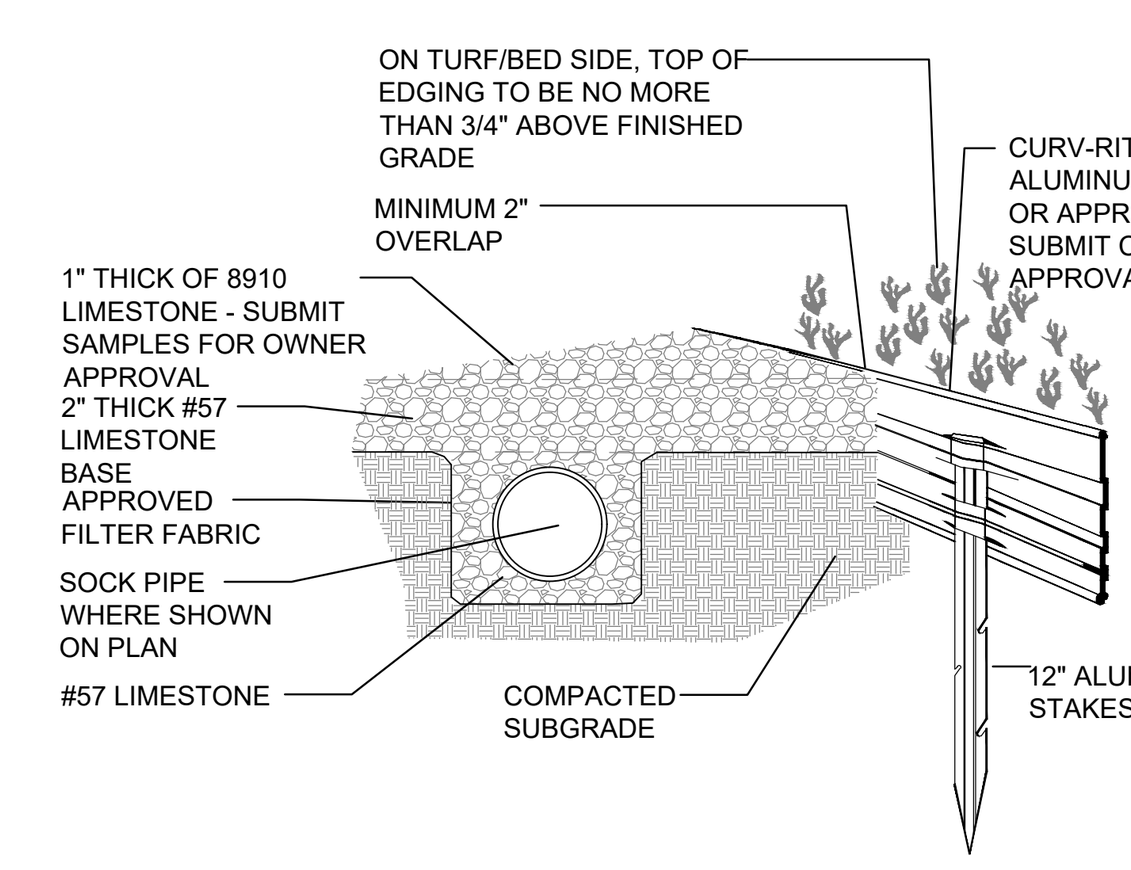

NOTE
SUBMIT SAMPLES OF LIMESTONE FOR APPROVAL BY LANDSCAPE ARCHITECT OR OWNER.

TECHNICAL SPECIFICATION:
LANDSCAPE BED EDGING SHALL BE CURV-RITE: (3/16) INCH THICK ALUMINUM EDGING, (5.5") INCHES DEEP MANUFACTURED BY CURV-RITE, INC. WAYLAND, MI: 1-8000-366-2878, OR APPROVED EQUAL. SIXTEEN (16) FOOT SECTIONS SHALL BE USED WITH (1) SUBSURFACE STAKE PER (38) INCHES OF EDGING. EDGING SHALL HAVE A MINIMUM OF (2) INCHES OF INTERLOCKING OVERLAP BETWEEN SECTIONS. INSTALL PER MANUFACTURER'S SPECIFICATIONS WITH TOP OF EDGING 1/4" TO 1/2" ABOVE COMPACTED FINISH GRADE. FINISH GRADE TO BE COMPACTED ON EITHER SIDE OF EDGING TO MAINTAIN STABILITY SUBMIT COLOR OPTIONS FOR APPROVAL.

4 LIMESTONE STRIP WITH BED EDGING
NOT TO SCALE

NOTE: PLANT MATERIAL SHOWN FOR COORDINATION PURPOSES ONLY. NOT IN CONTRACT. OTHER PREPARATION, EXISTING TREE PRUNING, SOD, AND MULCH INCLUDED IN CONTRACT.

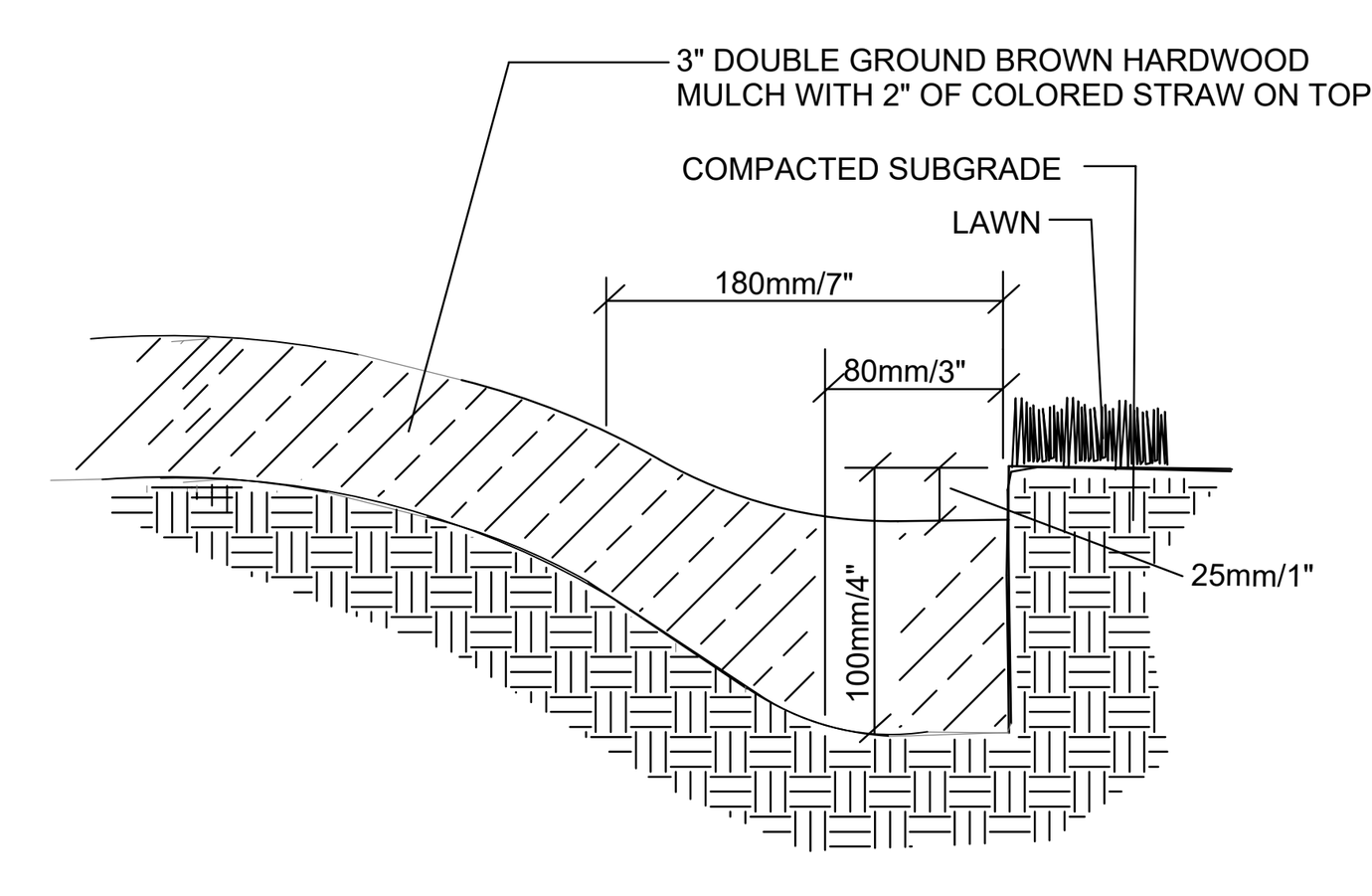

NOTE: TRENCH EDGE TO BE LOCATED BETWEEN PLANTING BEDS AND ALL LAWN AREAS.

5 TRENCH BED EDGE DETAIL
NOT TO SCALE

PLANT USE LIST - BASE BID

quantlty	botanical name	common name	size	remarks
566 CY	Zoysia japonica	PALISADES ZOYSIA	SOLID SOD	---

NOTE: FOR COORDINATION PURPOSES ONLY

PLANT USE LIST

quantlty	botanical name	common name	size	remarks
6	Amelanchier canadensis	SERVICEBERRY	8'-10' HT.	MIN. 45 GAL., MIN. 4'-5' SPREAD, FULL, WELL BRANCHED, SINGLE TRUNK SPECIMEN
68	Camellia sasanqua 'Shishi Gashira'	WHITE SHI SHI CAMELLIA	18-22" HT.	MIN. 3 GAL., @ 3' O/C, FULL, WELL BRANCHED PLANTS, STAGGER CENTERS
54	Miscanthus sinensis 'Adagio'	DWARF MISCANTHUS GRASS	18"-22" HT.	MIN. 3 GAL., @ 3' O/C, FULL, WELL BRANCHED PLANTS, STAGGER CENTERS
80	Dietes 'Bicolor'	BICOLOR AFRICAN IRIS	15-18" HT.	MIN. 3 GAL., @ 24" O/C, FULL, WELL BRANCHED PLANTS, STAGGER CENTERS

NOTE: QUANTITIES SHOWN IN THE "PLANT USE LIST" ARE SOLELY FOR THE CONVENIENCE OF THE LANDSCAPE CONTRACTOR. CONTRACTOR TO VERIFY QUANTITIES SHOWN ON THE "PLANTING PLAN" AGAINST THOSE SHOWN IN THE "PLANT USE LIST", AND PLANT THOSE QUANTITIES SHOWN ON THE "PLANTING PLAN".

PLANTS: LANDSCAPE CONTRACTOR SHALL SUBMIT PHOTOS WITH SCALE REFERENCES OF ALL PLANTS & TREES TO THE LANDSCAPE ARCHITECT FOR APPROVAL IN WRITING PRIOR TO HAVING THEM DELIVERED TO THE SITE.

GENERAL PLANTING NOTES:

1. CONTRACTOR SHALL BE RESPONSIBLE FOR THE SITE INSPECTION PRIOR TO LANDSCAPE CONTRUCTION IN ORDER TO ACQUAINT HIMSELF/HERSELF WITH EXISTING CONDITIONS. CONTRACTOR SHALL BE RESPONSIBLE FOR LOCATING ALL EXISTING UNDERGROUND UTILITIES BEFORE BEGINNING CONSTRUCTION.

2. CONTRACTOR SHALL VERIFY PLANT QUANTITIES FROM THE PLAN AND REPORT DIFFERENCES TO THE OWNER'S REPRESENTATIVE FOR ADJUSTMENTS.

3. ALL PLANT MATERIALS ARE SUBJECT TO APPROVAL OR REFUSAL BY THE OWNERS REPRESENTATIVE AT THE JOB SITE.

4. CONTRACTOR SHALL LAYOUT ALL PLANT MATERIAL FOR REVIEW BY OWNER'S REPRESENTATIVES APPROVAL PRIOR TO PLANTING. A MINIMUM 48 HOURS NOTICE SHOULD BE GIVEN AND ANTICIPATED BY THE CONTRACTOR FOR THIS REVIEW.

5. CONTRACTOR SHALL AMEND ALL PLANTING AREAS WITH 60% APPROVED ORGANIC SOIL MIX AND 40% APPROVED SANDY LOAM TOPSOIL PROPER DRAINAGE SHALL BE OBTAINED IN ALL AREAS. DO NOT BACK FILL HOLES WITH EXISTING SUBGRADE.

6. PLANTS SHALL BE WELL FORMED, VIGORUS, GROWING SPECIMENS WITH GROWTH TYPICAL OF VARIETIES SPECIFIED AND SHALL BE FREE FROM INJURY, INSECTS AND DESEASES. PLANTS SHALL EQUAL OR SURPASS QUALITY AS DEFINED IN THE CURRENT ISSUE OF NURSERY "AMERICAN STANDARDS FOR NURSERY STOCK" AS PUBLISHED BY THE AMERICAN NURSERYMEN, INC.

7. ALL PLANT MATERIAL SHALL BE CONTAINER GROWN UNLESS OTHERWISE SPECIFIED.

8. ALL PLANTING PITS SHALL BE DOUBLE THE SIZE OF THE ROOT BALL OR CONTAINER.

9. PROVIDE A WATER PERCOLATION TEST FOR ALL TREE PITS. FILL EACH TREE PIT WITH WATER, IF THE WATER DOES NOT PERCOLATE OUT WITHIN 12 HOURS, PROVIDE TREE PIT DRAINAGE. AUGER A 8" DIAMETER HOLE 36" DOWN AT THE BOTTOM OF THE TREE PIT AND FILL WITH CRUSHED STONE. TEST AGAIN FOR PROPER PERCOLATION.

10. FRONT ROW OR SHRUBS SHALL BE PLANTED A MINIMUM OF 24" BEHIND BED LINE AT LAWNS OR WALKS AND MINIMUM 36" BACK OF CURB AT PARKING AREAS.

11. BACK ROW OF SHRUB PLANTING SHALL BE PLANTED 36" OFF FACE OF BUILDING WALL. GROUND COVERS SHALL BE 12" OUT FROM BUILDING AS REQUIRED BY PLANT SPECIFICATIONS.

12. EXCAVATE EDGE OF ALL PLANTING BEDS TO 4" DEPTH TO FORM A NEAT CRISP DEFINITION.

13. PLANTING BEDS SHALL BE 6-8" ABOVE SOD GRADE.

14. ALL PLANTING BEDS AND TREE PITS SHALL BE MULCHED WITH A 3" SETTLED LAYER OF APPROVED MULCH ON LEVEL AREAS AND APPROVED MULCH ON SLOPES.

15. GRADE ALL AREAS FOR APPROVAL BY LANDSCAPE ARCHITECT BEFORE SODDING.

16. SEASONAL COLOR SHALL BE PLANTED IN FLOWERING STATE.

17. CONTRACTOR SHALL GUARANTEE ALL PLANT MATERIAL, INCLUDING GRASS FOR ONE FULL YEAR FROM DATE OF WRITTEN SUBSTANTIAL COMPLETION. (REFERENCE SPECIFICATIONS)

18. ALL TREES SHALL BE STAKED AND TIED IN THE FIELD BY AN APPROVED METHOD. REMOVE ALL GUY WIRES AND STAKES AT THE END OF THE GUARANTEE PERIOD.

19. TOPSOIL: TOPSOIL SHALL BE FERTILE, FRIABLE, SANDY LOAM AND A NATURAL SURFACE SOIL OBTAINED FROM WELL AREAS REVIEWED BY THE LANDSCAPE ARCHITECT AND POSSESSING CHARACTERISTICS OF REPRESENTATIVE SOILS IN THE PROJECT VICINITY THAT PRODUCE HEAVY GROWTHS OF CROPS, GRASS OR OTHER VEGETATION.
- TOPSOIL SHALL BE FREE OF SUBSOIL, BRUSH, ORGAINIC LITTER OR OBJECTIONABLE WEEDS, CLAY, CLOTS, STUMPS, STONES, ROOTS OR OTHER MATERIAL HARMFUL TO PLANT MATERIALS. SHOULD REGEERATIVE MATERIALS BE PRESEINT IN THE SOIL, CONTRACTOR SHALL ERADICATE AND REMOVE SUCH GROWTH, BOTH SURFACE AND ROOT, WHICH MAY APPEAR IN THE IMPORTED MATERIAL WITHIN ONE YEAR FOLLOWING ACCEPTANCE OF THE WORK.
- TOPSOIL SHALL NOT BE HANDLED IN A FROZEN MUDDY CONDITION. THE ACIDITY RANGE SHALL BE BETWEEN 5 AND 7, INCLUSIVE. THE MECHANICAL ANALYSIS OF THE SOIL SHALL BE AS FOLLOWS:

SIEVE SIZE	PERCENT PASSING
1 INCH MESH	99-100%
1/4 INCH MESH	97-99%
NO. 100 MESH	40-60%
NO. 200 MESH	20-40%

20. STOCKPILE MATERIAL THAT DOES NOT MEET THE REQUIREMENTS MAY, AT THE OPTION OF THE CONTRACTOR, BE IMPROVED BY SCREENING AND THE ADITION OF ORGANIC MATTER AND CHEMICAL ADMIXTURES.

21. APPROVED PRE-EMERGENT WEED CONTROL SHALL BE SPREAD PER MANUFACTURER'S RATES AFTER ALL PLANTINGS HAVE BEEN INSTALLED, IN ALL PLANTED AREAS PRIOR TO MULCHING WITH PINE STRAW.

22. MAINTAIN ALL LANDSCAPE WORK FOR 30 DAYS AFTER SUBSTANTIAL COMPLETION FOR THE ENTIRE PROJECT HAS BEEN PROVIDED IN WRITING TO THE OWNER FROM THE PROJECT ARCHITECT.

23. THE LANDSCAPE ARCHITECT IS NOT RESPONSIBLE FOR THE MEANS AND METHODS OF APPROPRIATENESS OF THE INSTALLATION PROCEDURES UNDERTAKEN BY ANY CONTRACTOR AND IS NOT RESPONSIBLE FOR JOB SAFETY.

www.christianpreus.com
CHRISTIANPREUS Landscape Architecture
Ocean Springs, Mississippi . Fairhope, Alabama . P 855.539.5086 . F 855.539.5086

general notes

keyplan

WHLC | ARCHITECTURE

TRANSIT HUB PAVILION
LOXLEY MUNICIPAL PARK
LOXLEY, ALABAMA

STATE OF ALABAMA REGISTERED LANDSCAPE ARCHITECT CHRISTIAN HART PREUS NUMBER 810
11.16.23

washer hill lipscomb cabaniss architecture, llc copyright 2022

70 south section st fairhope, al
t 251.990.6200

21-205
NOVEMBER 16th, 2023
BID SET

LANDSCAPE DETAILS AND SCHEDULE

L1.1

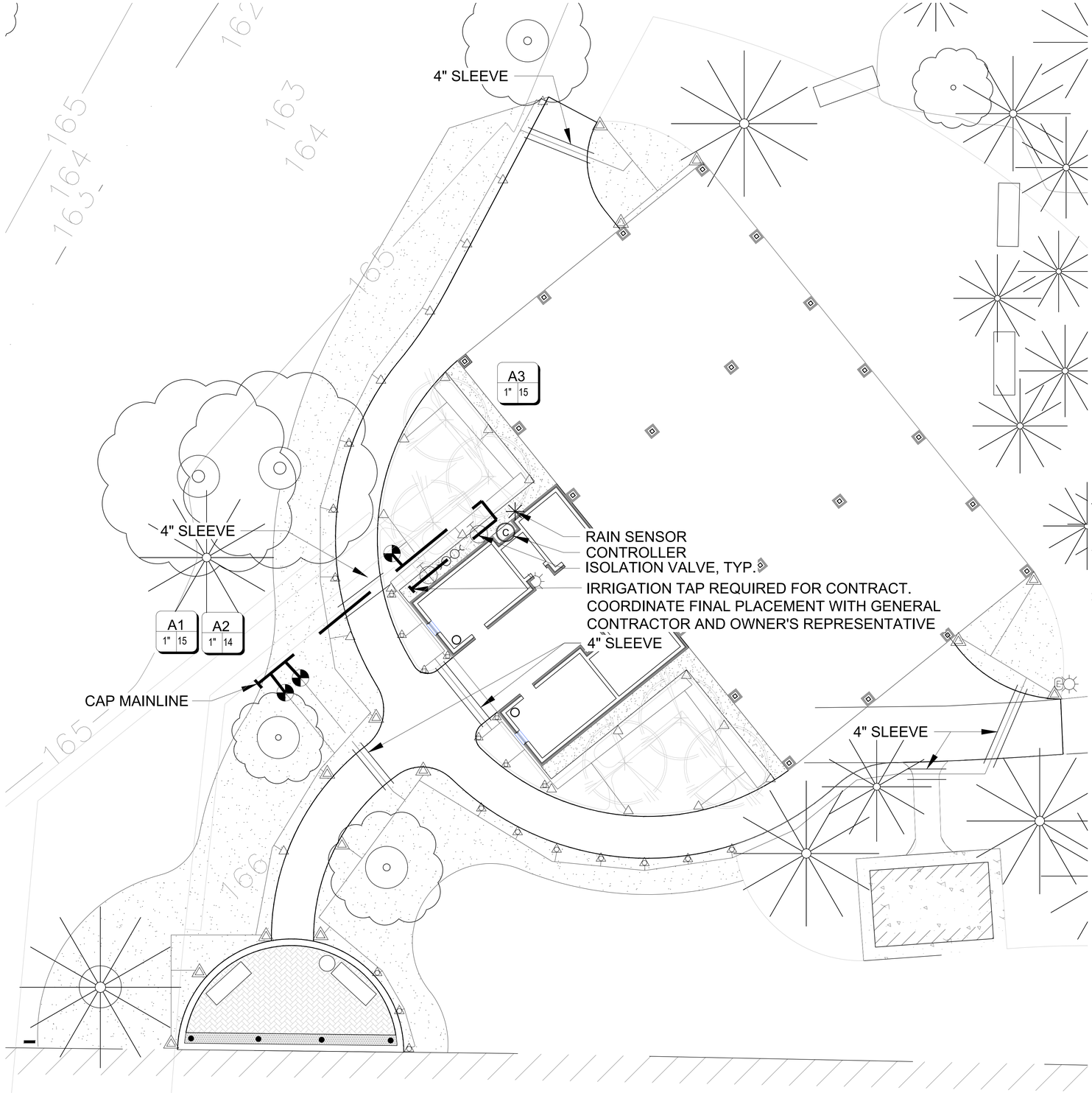

1 **IRRIGATION PLAN**
1" = 10'-0"

IRRIGATION LEGEND:

- RAINBIRD RVAN 18-24 ROTATOR NOZZLE ON 1812 SPRINKLER, USE 6" RISER IF NECESSARY
- RAINBIRD RVAN 13-18 ROTATOR NOZZLE ON 1812 SPRINKLER, USE 6" RISER IF NECESSARY
- RAINBIRD RVAN STRIP SERIES ROTATOR NOZZLE ON 1812 SPRINKLER, USE 6" RISER IF NECESSARY
- RAINBIRD, PEB SERIES, 1" AND 1 1/2" EL. REMOTE CONTROL VALVE (OR APP'D. EQ.), IN MIN. 12" ROUND BOX, FILL BOTTOM W/PEA GRAVEL, (SEE DETAIL)
- C — RAINBIRD ESP-LXD TWO-WIRE CONTROLLER. PEDESTAL OR WALL MOUNTED, TO BE DETERMINED IN FIELD BY LANDSCAPE ARCHITECT. LOCATION SHOWN ON DRAWING IS A GENERAL REFERENCE. FINAL LOCATION TO BE DETERMINED WITH LANDSCAPE ARCHITECT OR OWNER'S REPRESENTATIVE IN THE FIELD. (SEE SHEET I1.4).
- WIRELESS RAIN SENSOR
- DOUBLE CHECK VALVE (SEE DETAIL 2, SHEET I1.4)
- ISOLATION VALVE - (MAIN SIZE), 125# W.O.G., BRASS BALL VALVE IN AMETEK 10" ROUND BOX, FILL BOTTOM WITH PEA GRAVEL (SIMILAR TO CONTROL VALVE)
  ISOLATION VALVES (IV) SHALL BE IN A LOCKABLE BOX.
- IRRIGATION MAINLINE, PVC SDR 21, CLASS 200BE SIZE AS NOTED ON DRAWINGS
- IRRIGATION LATERAL PIPE, PVC SDR 21, CLASS 200BE
- SCHEDULE 40 PVC SLEEVE - SIZE AS NOTED ON DRAWING

PIPE SIZING CHART:

CONTRACTOR TO SIZE EACH CIRCUIT/STATION LATERAL PIPING USING THE FOLLOWING:

PIPE SIZE	MAX. GPM'S
1/2"	6
3/4"	10
1"	16
1 1/4"	28
1 1/2"	35
2"	55
3"	120

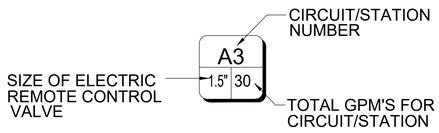

www.christianpreus.com
CHRISTIANPREUS Landscape Architecture
Ocean Springs, Mississippi . Fairhope, Alabama . P 855.539.5086 . F 855.539.5086

general notes

keyplan

WHLC | ARCHITECTURE

TRANSIT HUB PAVILION
LOXLEY MUNICIPAL PARK
LOXLEY, ALABAMA

STATE OF ALABAMA — LICENSED LANDSCAPE ARCHITECT — CHRISTIAN PREUS — NUMBER — 1.16.23

washer hill lipscomb cabaniss architecture, llc
copyright 2022

70 south section st fairhope, al
t 251.990.6200

21-205
NOVEMBER 16th, 2023
BID SET

IRRIGATION PLAN

I1.0

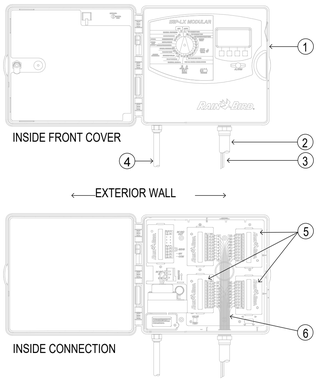

1. MODULAR HYBRID CONTROLLER - RAIN BIRD ESP-LX MODULAR INSIDE WALL MOUNT.
2. 1 1/2" PVC SCH. 40 CONDUIT & FITTINGS.
3. WIRES TO REMOTE CONTROL VALVES.
4. 1" PVC SCH. 40 CONDUIT TO POWER SUPPLY.
5. BASE MODEL IS 24 STATION.
6. WIRES TO REMOTE CONTROL VALVES.

NOTE: MOUNT CONTROLLER ON AVAILABLE EXTERIOR WALL SPACE IN APPROXIMATE LOCATION SHOWN. COORDINATE LOCATION WITH LANDSCAPE ARCHITECT.

NOTE: COORDINATE ELECTRICAL REQUIREMENTS W/ ELEC. CONTR.

NOTE - PROVIDE AND INSTALL APPROPRIATE GROUND RODS AND WIRING FOR EACH CONTROLLER AS NECESSARY AND AS RECOMMENDED BY MANUFACTURER.

1 ESP-LX CONTROLLER
NOT TO SCALE

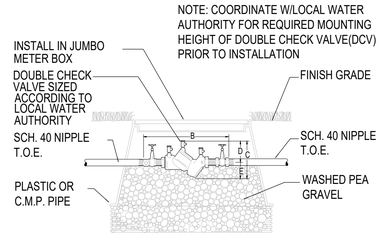

DIMENSIONS (INCHES)

SIZE	B	C	D	E	WIDTH
3/4"	12-1/4"	6-7/8"	4"	2-7/8"	2-3/4"
1"	13-3/4"	6-7/8"	4-3/8"	2-7/8"	2-3/4"
1-1/2"	16-3/4"	9-7/8"	5-1/3"	4-7/8"	4-1/4"
2"	17-3/4"	9-7/8"	6-3/8"	4-7/8"	4-1/4"

CONTRACTOR SHALL COMPLY WITH ALL LOCAL CODES AND ORDINANCES IN REFERENCE TO INSTALLATION AND VENTING OF BACKFLOW PREVENTION DEVICE.

2 DOUBLE CHECK VALVE
NOT TO SCALE

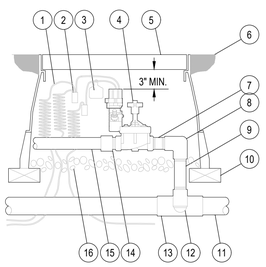

1. 30-INCH LINEAR LENGTH OF WIRE, COILED
2. WATERPROOF CONNECTION RAIN BIRD SPLICE-1 (1 OF 2)
3. ID TAG: RAIN BIRD VID SERIES
4. REMOTE CONTROL VALVE: PEB-PRS-D
5. VALVE BOX WITH COVER: RAIN BIRD VB-STD
6. FINISH GRADE/TOP OF MULCH
7. PVC SCH 80 NIPPLE (CLOSE)
8. PVC SCH 40 ELL
9. PVC SCH 80 NIPPLE (LENGTH AS REQUIRED)
10. BRICK (1 OF 4)
11. PVC MAINLINE PIPE
12. SCH 80 NIPPLE (2-INCH LENGTH, HIDDEN) AND SCH 40 ELL
13. PVC SCH 40 TEE OR ELL
14. PVC SCH 40 MALE ADAPTER
15. PVC LATERAL PIPE
16. 3.0-INCH MINIMUM DEPTH OF 3/4-INCH WASHED GRAVEL

3 PEB-PRS-D ELECTRIC REMOTE CONTROL VALVE
NOT TO SCALE

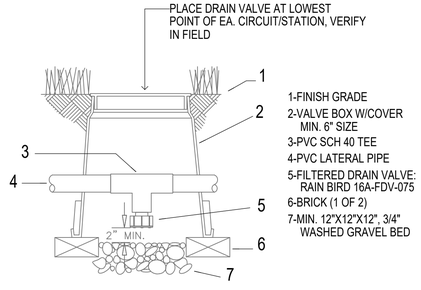

1. 1-FINISH GRADE
2. 2-VALVE BOX W/COVER MIN. 6" SIZE
3. 3-PVC SCH 40 TEE
4. 4-PVC LATERAL PIPE
5. 5-FILTERED DRAIN VALVE: RAIN BIRD 16A-FDV-075
6. 6-BRICK (1 OF 2)
7. 7-MIN. 12"X12"X12", 3/4" WASHED GRAVEL BED

4 DRAIN VALVE
NOT TO SCALE

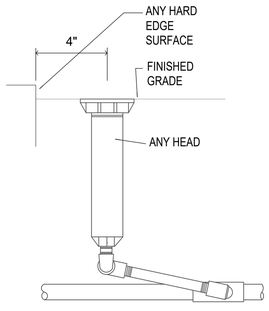

5 ANY HEAD
NOT TO SCALE

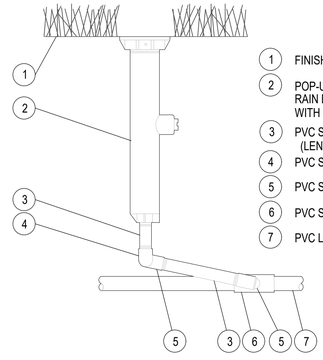

1. FINISH GRADE/TOP OF MULCH
2. POP-UP SPRAY SPRINKLER: RAIN BIRD 1806 -SAM-PRS WITH 1800 VPC WITH RAIN BIRD ROTARY NOZZLE
3. PVC SCH 80 NIPPLE (LENGTH AS REQUIRED)
4. PVC SCH 40 ELL
5. PVC SCH 40 STREET ELL
6. PVC SCH 40 TEE OR ELL
7. PVC LATERAL PIPE

6 1806 HEAD IN LAWN
NOT TO SCALE

general notes

keyplan

www.christianpreus.com
CHRISTIANPREUS Landscape Architecture
Ocean Springs, Mississippi . Fairhope, Alabama . P 855.539.5086 . F 855.539.5086

WHLC | ARCHITECTURE

TRANSIT HUB PAVILION

LOXLEY MUNICIPAL PARK
LOXLEY, ALABAMA

STATE OF ALABAMA
CHRISTIAN ANDREW PREUS
REGISTERED LANDSCAPE ARCHITECT
11.16.23

washer hill lipscomb cabaniss architecture, llc
copyright 2022
70 south section st fairhope, al
t 251.990.6200

21-205
NOVEMBER 16th, 2023
BID SET

IRRIGATION DETAILS

I1.1

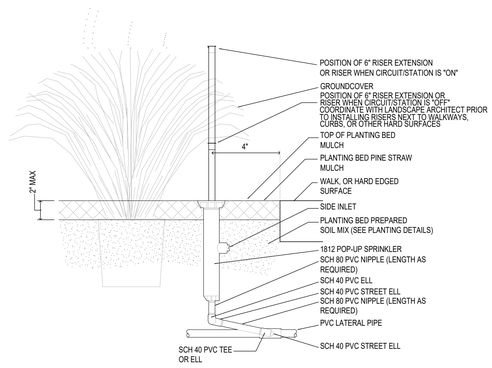

1 1812 W/ 6" RISER EXTENSION IN PLANTING BED
NOT TO SCALE

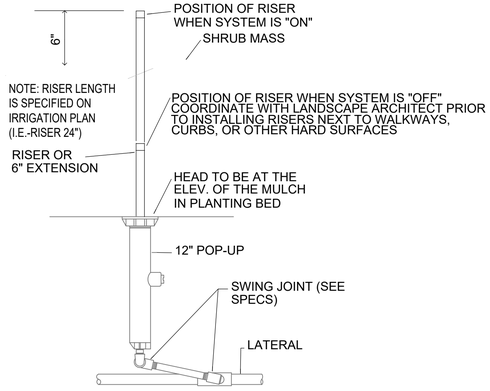

2 12" POP-UP W/ RISER
NOT TO SCALE

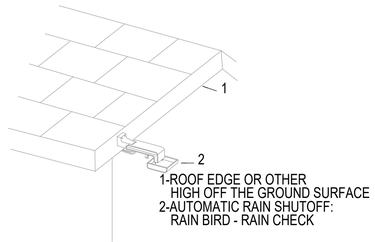

3 AUTOMATIC RAIN SHUT-OFF
NOT TO SCALE

IRRIGATION NOTES

1. The irrigation system is diagrammatic based upon the information provided by the owner or the owner's representative. The successful contractor is responsible to install a system that will properly cover all areas indicated on the design. Actual layout of piping, sprinkler heads, valves, controllers and other related equipment shall be determined on site. Minor field changes shall be made at no additional cost to the owner.

It is the responsibility of the irrigation contractor to be familiar with all grade differences, locations of walls, structures and utilities and make the necessary adjustments to accommodate the irrigation system as shown on the drawings. There may be times when it is obvious in the field that unknown obstructions, grades or dimensions that exist might not have been considered in the engineering, such obstructions should be brought to the attentions of the owner's authorized representative. In the event that this notification is not performed, the irrigation contractor shall assume full responsibility for any revisions and costs that occur.

2. This system shall be installed using accepted and quality installation standards as used in the industry. All manufacturers specifications will be followed.

3. Mainline shall be buried a minimum of 12" of cover and a maximum of 18" of cover. Lateral line piping a minimum of 12" of cover. All backfill surrounding the pipe shall be cleaned of materials larger than 1" in size. Backfill shall be added in 6" increments and mechanically tamped.

4. There will be no substitutions or changes to the irrigation design allowed without direct, written approval from the Irrigation Consultant.

5. System design is based on pressure and flow information provided by others, static pressure of 35 psi and the size of the point of connection (P.O.C.) is as indicated on the drawing. The irrigation contractor shall verify water pressures prior to construction. Report differences between requirements and the actual readings to the owner's representative so that any zone adjustments can be made prior to installation.

6. Piping shown in paved area without sleeve is diagrammatic and shall be located inside of the planted area or turf area approximately 1' from any hardscape.

7. All valves shall be placed in valve boxes as shown in the details and all electrical connections shall be sealed with waterproof connectors. Control wire shall be solid copper wire U.L. approved for direct burial in the ground. See details.

8. Controllers, meters, taps and backflow locations are as shown on the plan or as stated in the details and legend. All information is to be verified prior to any installation of the project.

9. The Irrigation Contractor is responsible for all clean up associated with his work.

10. Irrigation contractor shall all provide the first winterization, spring turn on, head adjustments and controller maintenance in bid.

11. Costs associated with irrigation meter(s) and taps if required for irrigation shall be the responsibility of the irrigation contractor and shall be included in his/her bid.

www.christianpreus.com
CHRISTIANPREUS Landscape Architecture
Ocean Springs, Mississippi . Fairhope, Alabama . P 855.539.5086 . F 855.539.5086

general notes

keyplan

WHLC | ARCHITECTURE

TRANSIT HUB PAVILION

LOXLEY MUNICIPAL PARK
LOXLEY, ALABAMA

STATE OF ALABAMA
CHRISTIAN PREUS
NUMBER
REGISTERED LANDSCAPE ARCHITECT
11.16.23

washer hill lipscomb cabaniss architecture, llc
copyright 2022
70 south section st fairhope, al
t 251.990.6200

21-205
NOVEMBER 16th, 2023
BID SET

IRRIGATION DETAILS

I1.2

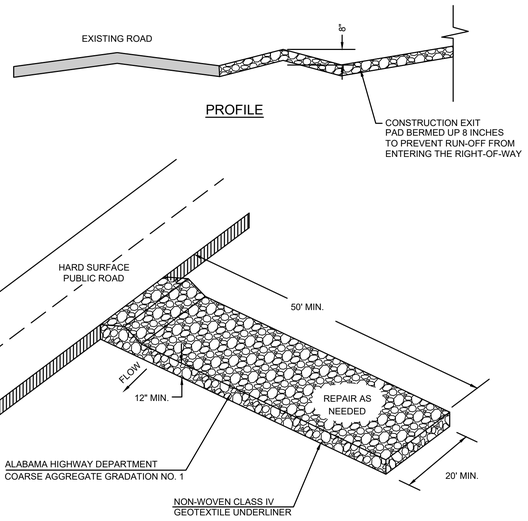

CEP **CONSTRUCTION EXIT PAD**
SCALE: NTS

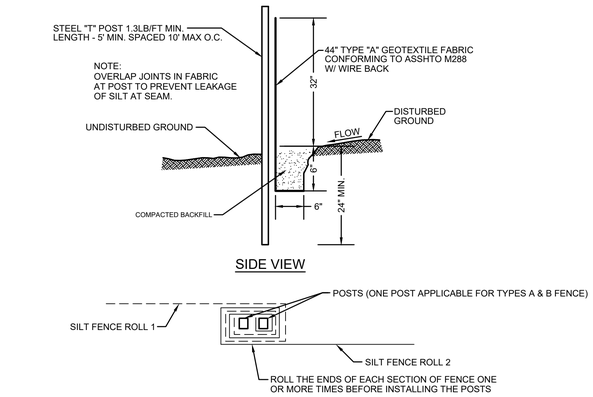

SIDE VIEW

ROLL JOINT FOR JOINING TWO SILT FENCE SECTIONS

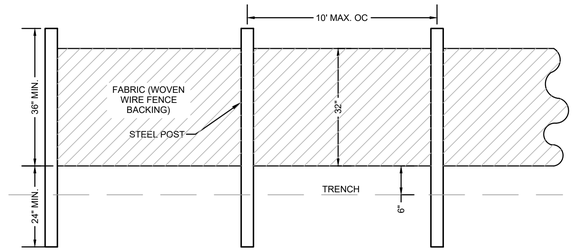

FRONT VIEW

SB **SILT BARRIER TYPE "A"**
SCALE: NTS

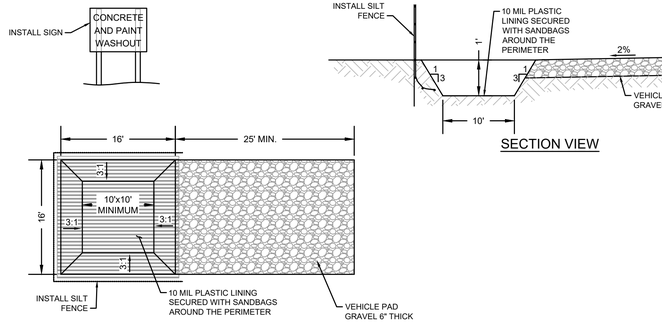

CONCRETE/PAINT WASHOUT DETAIL
SCALE: NTS

SECTION VIEW

MATERIAL	RATE PER ACRE & (PER 1000 SF)	NOTES
STRAW WITH SEED	1 1/2 - 2 TONS (70 LBS-90 LBS)	SPREAD BY HAND OR MACHINE; ANCHOR WHEN SUBJECT TO BLOWING
STRAW ALONE (NO SEED)	2 1/2 - 3 TONS (115 LBS-160 LBS)	SPREAD BY HAND OR MACHINE; ANCHOR WHEN SUBJECT TO BLOWING
WOOD CHIPS	5-6 TONS (225 LBS-270 LBS)	TREAT WITH 12 LBS NITROGEN/TON
BARK	35 CUBIC YARDS (0.8 CUBIC YARDS)	CAN APPLY WITH MULCH BLOWER
PINE STRAW	1-2 TONS (45 LBS-90 LBS)	SPREAD BY HAND OR MACHINE; WILL NOT BLOW LIKE STRAW
PEANUT HULLS	10-20 TONS (450 LBS-900 LBS)	WILL WASH OFF SLOPES. TREAT WITH 12 LBS NITROGEN/TON

MU **MULCHING**
SCALE: NTS

SPECIES	SEEDING RATE/ACRE	NORTH	CENTRAL SEEDING DATES	SOUTH
MILLET, BROWNTOP OR GERMAN	40 LBS	MAY 1-AUG 1	APR 1-AUG 15	APR 1-AUG 15
RYE	3 BU	SEPT 1-NOV 15	SEPT 15-NOV 15	SEPT 15-NOV 15
RYEGRASS	30 LBS	AUG 1-SEPT 15	SEPT 1-OCT 15	SEPT 1-OCT15
SORGHUM-SUDAN HYBRIDS	40 LBS	MAY 1-AUG 1	APR 15-AUG 1	APR 1-AUG 15
SUDANGRASS	40 LBS	MAY 1-AUG 1	APR 1-AUG 1	APR 1-AUG 15
WHEAT	3 BU	SEPT 1-NOV 1	SEPT 15-NOV 15	SEPT 15-NOV15
COMMON BERMUDAGRASS	10 LBS	APR 1-JULY 1	MAR 15-JULY 15	MAR 1-JULY 15
CRIMSON CLOVER	10 LBS	SEPT 1-NOV 1	SEPT 1-NOV 1	SEPT 1-NOV 1

LIME RATE:
1 TON PER ACRE ON COARSE TEXTURED SOILS
3 TONS PER ACRE ON FINE TEXTURED SOILS

FERTILIZER RATE:
APPLY 8-24-24 FERTILIZER PER MANUFACTURER'S RECOMMENDATIONS
WHEN VEGETATION HAS EMERGED TO A STAND AND IS GROWING, FERTILIZE WITH 30 TO 40 LBS/ACRE OF 28-0-0

MULCH RATE:
PER MULCHING DETAIL

TS **TEMPORARY SEEDING**
SCALE: NTS

ZONE 3 - AREAS NOT SUBJECT TO FREQUENT MOWING REQUIRED POUNDS PER ACRE OF PURE LIVE SEED				
DATE OF PLANTING	JAN. 1 TO FEB. 15	FEB. 16 TO AUG. 31	SEPT. 1 TO NOV. 30	DEC. 1 TO DEC. 31
ANNUAL RYEGRASS	10		10	10
HULLED BERMUDAGRASS		12	12	
UNHULLED BERMUDAGRASS	29	18	12	29
TALL FESCUE	29		35	29
WEEPING LOVEGRASS		2	2	
ANNUAL LESPEDEZA (KOBE)		50		
RESEEDING CRIMSON CLOVER	29		29	29
PENSACOLA BAHIAGRASS	29	24	29	29
REQUIRED PERMANENT PLANT	MIXED			

LIME RATE:
1 TON PER ACRE ON LIGHT-TEXTURED, SANDY SOILS (IF THE COVER WILL BE TALL FESCUE AND CLOVER USE 2 TONS/ACRE.)
2 TONS PER ACRE ON HEAVY-TEXTURED, CLAYEY SOILS

FERTILIZER RATE:
GRASSES ALONE: 400 LB/ACRE OF 8-24-24
WHEN VEGETATION HAS EMERGED TO A STAND AND IS GROWING, FERTILIZE WITH 30 TO 40 LBS/ACRE OF 28-0-0
GRASS-LEGUME MIXTURES: 800 TO 1200 LB/ACRE OF 5-10-10 OR THE EQUIVALENT
LEGUMES ALONE: 800 TO 1200 LB/ACRE OF 0-10-10 OR THE EQUIVALENT

MULCH RATE:
PER MULCHING DETAIL

PS **PERMANENT SEEDING**
SCALE: NTS

811 Know what's below. Call before you dig.

WHLC | ARCHITECTURE

SE Civil Engineering & Surveying
9909 Windmill Road
Fairhope, AL 36532
251.990.6606

TRANSIT HUB PAVILION
LOXLEY MUNICIPAL PARK
LOXLEY, ALABAMA

IF NOT SIGNED IN BLUE INK IT IS A COPY
ALABAMA LICENSED PROFESSIONAL No. 25164 ENGINEER
DAVID R. RICHARD
DAVID R. RICHARD
STATE OF ALABAMA

WASHER HILL
LIPSCOMB CABANISS
ARCHITECTURE, LLC
COPYRIGHT 2022
70 South Section St.
Fairhope, AL
251.990.6200

JOB No. 20221166	DATE 6/22/23
DRAWN DRL	SCALE N.T.S.

CONSTRUCTION DETAILS

SHEET
C06

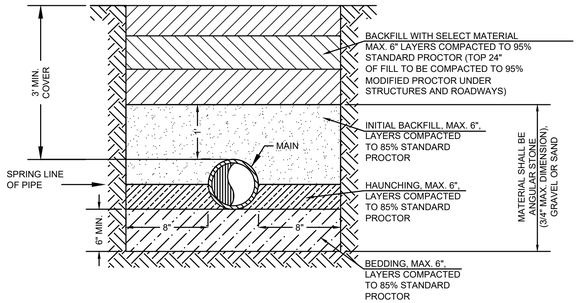

SANITARY SEWER PVC PIPE BEDDING

SCALE: NTS

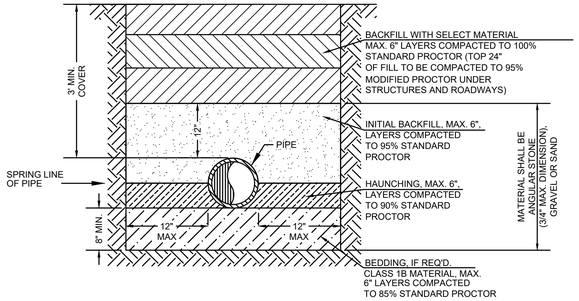

PVC WATER BEDDING

SCALE: NTS

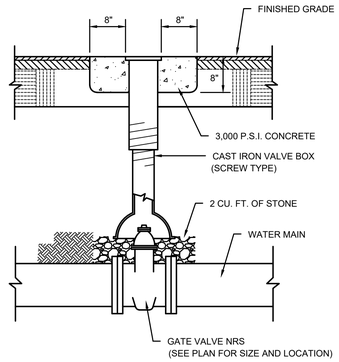

VALVE BOX SETTING

SCALE: NTS

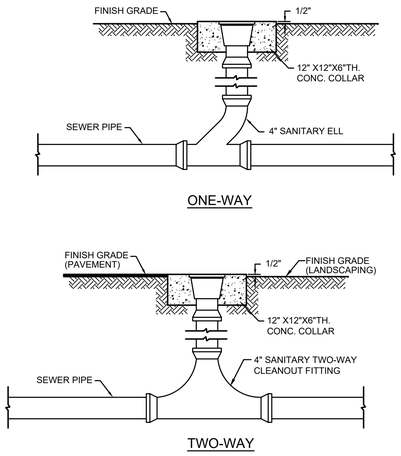

NOTE:
CLEANOUT TO BE 4" DURA-COATED HEAVY DUTY WITH ROUND TOP & BRONZE PLUG ZURN Z-1400-HD, WADE W-6000-2, WATTS CO-Z00-RX4, OR APPROVED EQUAL.

SANITARY SEWER CLEANOUT

SCALE: NTS

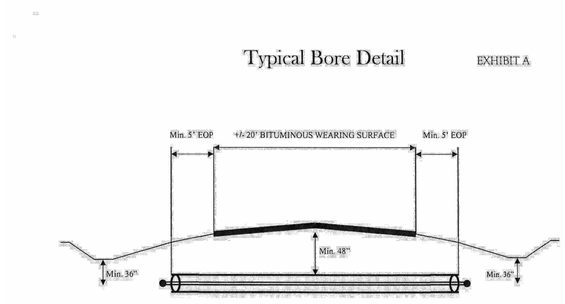

Bore detail for MUNICIPAL PARK DRIVE

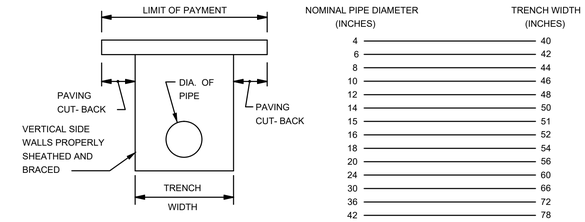

NOMINAL PIPE DIAMETER (INCHES)	TRENCH WIDTH (INCHES)
4	40
6	42
8	44
10	46
12	48
14	50
15	51
16	52
18	54
20	56
24	60
30	66
36	72
42	78
48	84

NOTES:

THE JAGGED EDGES OF THE EXISTING PAVEMENT ALONG THE TRENCH CUT SHALL BE SQUARED AND CUT TO A NEAT LINE WITH AN APPROPRIATE SAW ALONG STRAIGHT LINES PARALLEL TO THE CENTER OF THE PAVEMENT CUT.

ALL STRIPING MUST BE REPLACED WITH THERMOPLASTIC.

TRENCH WIDTHS AND PAVING CUT- BACKS

SCALE: NTS

THRUST BLOCK BEARING AREAS (SQ.FT.)						VERTICAL ANCHOR BLOCK VOLUMES		
SIZE	PLUGGED END OR TEE	90° BEND	45° BEND	22-1/2° BEND	11-1/4° BEND	45° VERT. BEND	22-1/2° VERT. BEND	GATE VALVE
2" DIA. PIPE LINE	1.0	1.0	1.0	1.0	1.0	9.3 CU. FT.	4 CU. FT.	0.5 CU. FT.
4" DIA. PIPE LINE	1.9	2.6	1.4	1.0	1.0	21.1 CU. FT.	9.8 CU. FT.	0.8 CU. FT.
6" DIA. PIPE LINE	3.6	5.0	2.7	1.4	1.0	50 CU. FT.	16 CU. FT.	1.0 CU. FT.
8" DIA. PIPE LINE	5.8	8.2	4.4	2.25	1.2			1.5 CU. FT.

NOTE: THRUST BLOCK BEARING AREAS SHALL BE INCREASED IN POOR TRENCH CONDITIONS AS DIRECTED BY THE ENGINEER

DESIGN CRITERIA: TEST PRESSURE - 150 PSI
SOIL BEARING PRESSURE - 1 TON PER SQ. FT.

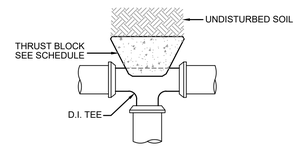

TEE THRUST BLOCK DETAIL

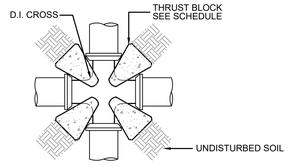

CROSS THRUST BLOCK DETAIL

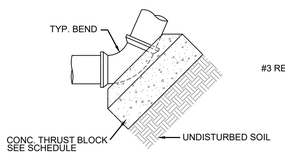

VERT. THRUST BLOCK DETAIL

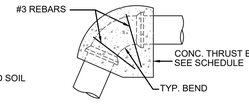

VERT. THRUST BLOCK DETAIL

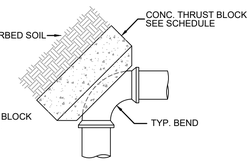

HORIZ. THRUST BLOCK DETAIL

THRUST BLOCK DETAIL

SCALE: NTS

811 Know what's below. Call before you dig.

TRANSIT HUB PAVILION
LOXLEY MUNICIPAL PARK
LOXLEY, ALABAMA

WHLC | ARCHITECTURE

SE Civil Engineering & Surveying
9969 Windmill Road
Fairhope, AL 36532
251.990.6606

IF NOT SIGNED IN BLUE INK THIS DOCUMENT IS A COPY THAT MAY HAVE BEEN ALTERED
ALABAMA LICENSED No. 35064 PROFESSIONAL ENGINEER
DAVID R. RICHARD

WASHER HILL LIPSCOMB CABANISS ARCHITECTURE, LLC
COPYRIGHT 2022

70 South Section St.
Fairhope, AL
251.990.6200

JOB No.	DATE
20221166	6/22/23
DRAWN	SCALE
DRL	N.T.S.

CONSTRUCTION DETAILS

SHEET
C07

STRUCTURAL DESIGN CRITERIA

APPLICABLE CODES

2018 INTERNATIONAL BUILDING CODE

ASCE 7–16 – MINIMUM DESIGN LOADS FOR BUILDINGS & OTHER STRUCTURES

AISC 14TH EDITION – STEEL CONSTRUCTION MANUAL.

ACI318–14 – BUILDING CODE REQUIREMENTS FOR STRUCTURAL CONCRETE

TMS 402–2016 – BUILDING CODE FOR MASONRY STRUCTURES

DESIGN GRAVITY LOADS

ROOF DL = 10 PSF (TOP CHORD)
CEILING DL = 10 PSF (BOTTOM CHORD)
ROOF LL = 20 PSF

WIND LOADS (ASCE 7–16)

ENCLOSURE CLASSIFICATION:
"ENCLOSED" @ RESTROOM BUILDING
"OPEN" @ PAVILION
WIND RISK CATEGORY = II
WIND SPEED Vult = 155 MPH Vasd = 120 MPH
WIND EXPOSURE CATEGORY = "C"
MEAN ROOF HT. = 25–FT.

SCHEDULE OF STRUCTURAL DRAWINGS

S0.1	GENERAL NOTES
S0.2	GENERAL NOTES
S0.3	GENERAL NOTES
S1.1	FOUNDATION / SLAB PLAN
S1.2	TRUSS BOTTOM CHORD BRACING PLAN
S1.3	ROOF FRAMING PLAN
S1.4	STRUCTURAL TRUSS ELEVATIONS
S2.1	MASONRY SECTIONS AND DETAILS
S3.1	FOUNDATION SECTIONS AND DETAILS
S4.1	ROOF FRAMING SECTIONS AND DETAILS
S4.2	ROOF FRAMING SECTIONS AND DETAILS

STRUCTURAL SITE VISITS

SITE VISITS DURING CONSTRUCTION WILL BE MADE BY THE STRUCTURAL ENGINEER IN ACCORDANCE WITH THE SCHEDULE STATED BELOW AND AT OTHER TIMES AS DEEMED APPROPRIATE. THE CONTRACTOR SHALL NOTIFY THE STRUCTURAL ENGINEER WHEN THE PROJECT HAS PROGRESSED TO THE POINT WHERE THE ITEMS TO BE INSPECTED ARE IN PLACE AND COMPLETE. FAILURE TO NOTIFY MAY REQUIRE REMOVAL OF COMPLETE CONSTRUCTION IN ORDER FOR THE SCHEDULED INSPECTIONS.

SCHEDULE OF STRUCTURAL SITE VISITS:

1. UPON COMPLETION OF COLD FORMED METAL TRUSS INSTALLATION INCLUDING END ANCHORAGE.
2. AFTER INSTALLATION OF METAL ROOF DECK BUT PRIOR TO COVERING WITH ROOFING MATERIALS.

STRUCTURAL TESTS & SPECIAL INSPECTIONS:

STRUCTURAL TESTS AND SPECIAL INSPECTIONS ARE REQUIRED IN ACCORDANCE WITH CHAPTER 17 OF THE 2018 INTERNATIONAL BUILDING CODE. THE CONTRACTOR SHALL COORDINATE ALL REQUIRED TESTS AND INSPECTIONS WITH THE OWNERS DESIGNATED AGENT AND WITH THE SPECIAL INSPECTORS ASSIGNED TO THE PROJECT. THE EXTENT OF SPECIAL TESTS AND STRUCTURAL INSPECTIONS ARE IDENTIFIED IN THE SCHEDULE OF SPECIAL INSPECTION SERVICES AS CONTAINED IN THE PROJECT SPECIFICATIONS. FAILURE TO PERFORM THE REQUIRED INSPECTIONS AND TESTS MAY REQUIRE THE REMOVAL OF THE COMPLETED CONSTRUCTION SO THAT THE SPECIFIED TESTS AND INSPECTIONS CAN BE PERFORMED AS REQUIRED.

BARTER & ASSOCIATES, INC.
Structural Engineers
1614 GOVERNMENT ST.
MOBILE, AL 36604-1102
PH. 251-473-8354
FAX 251-473-8356

© Copyright 2022, Barter & Associates, Inc.

ABBREVIATIONS

AFF – ABOVE FINISHED FLOOR
ARCH – ARCHITECTURAL
BC – BOTTOM CHORD
BCX – BOTTOM CHORD EXTENSION
BFF – BELOW FINISHED FLOOR
BLDG – BUILDING
BOS – BOTTOM OF STEEL
BP – BASE PLATE
BRG – BEARING
BTM – BOTTOM
BTWN – BETWEEN
CC – CENTER TO CENTER
CLR – CLEAR COVER
COL – COLUMN
CONT – CONTINUOUS
DBA – DEFORMED BAR ANCHOR
DET – DETAIL
DWG – DRAWING
EA – EACH
EF – EACH FACE
ELEV – ELEVATION
EQ – EQUAL
EW – EACH WAY
EXIST – EXISTING
EXP ANCH – EXPANSION ANCHOR
EXP. JT. – EXPANSION JOINT
FFE – FINISHED FLOOR ELEVATION
FNDN – FOUNDATION
FOC – FACE OF CONCRETE
FOM – FACE OF MASONRY
FOS – FACE OF STUD
FTG – FOOTING
GALV – GALVANIZED
HDG – HOT DIPPED GALVANIZED
HORIZ – HORIZONTAL
HSA – HEADED STUD ANCHOR
HSB – HIGH STRENGTH BOLT
JST – JOIST
LG – LONG
LLH – LONG LEG HORIZONTAL
LLV – LONG LEG VERTICAL
LLBB – LONG LEG BACK TO BACK
MAT'L – MATERIAL
MAX – MAXIMUM
MECH – MECHANICAL
MCJ – MASONRY CONTROL JOINT
MEJ – MASONRY EXPANSION JOINT
MO – MASONRY OPENINGS
MRA – MASONRY RIGID ANCHOR
MIN – MINIMUM
NIC – NOT IN CONTRACT
NTS – NOT TO SCALE
o.c. – ON CENTER
O/O – OUT TO OUT
PAF – POWER ACTIVATED FASTENER
REF – REFERENCE
REIN – REINFORCE
REQ'D – REQUIRED
SEC – SECTION
SHT – SHEET
SPC'S – SPACES
STD – STANDARD
STL – STEEL
TCX – TOP CHORD EXTENSION
TOF – TOP OF FOOTINGS
TOM – TOP OF MASONRY
TOS – TOP OF STEEL
TOW – TOP OF WALL
TYP – TYPICAL
UNO – UNLESS NOTED OTHERWISE
VERT – VERTICAL
W/ – WITH
WP – WORKING POINT
WWR – WELDED WIRE REINFORCEMENT

TABLE–1

"ENCLOSED STRUCTURE"
GABLE ROOF (10:12)
MEAN ROOF HT. = 25 FT.

ZONE		TRIB. AREA	COMPONENT PRESSURE POSITIVE (+)	NEGATIVE (–)	OVERHANG
ROOF	1,2e, 2r	10	+35.6	–97.8	–119.6
		20	+29.6	–83.0	–104.7
		50	+21.8	–63.3	–85.0
		100	+16.0	–48.4	–70.2
	2n,3r	10	+35.6	–107.7	–138.4
		20	+29.6	–96.3	–126.9
		50	+21.8	–81.2	–111.8
		100	+16.0	–69.7	–100.4
	3e	10	+35.6	–132.1	–162.7
		20	+29.6	–117.1	–147.7
		50	+21.8	–97.2	–127.8
		100	+16.0	–82.1	–112.8
WALL	4	10	+58.3	–63.3	-----
		20	+55.7	–60.6	-----
		50	+52.2	–57.2	-----
		100	+49.6	–54.5	-----
		500	+43.5	–48.4	-----
	5	10	+58.3	–78.1	-----
		20	+55.7	–72.8	-----
		50	+52.2	–65.9	-----
		100	+49.6	–60.6	-----
		500	+43.5	–48.4	-----

NOTES:

1. LOADS SHOWN IN TABLES ARE ULITMATE LEVEL WIND PRESSURES.
2. ALL PARTS AND COMPONENTS FORMING THE EXTERIOR ENVELOPE OF THE BUILDING SHALL BE DESIGNED TO RESIST THE COMPONENT & CLADDING LOADS INDICATED. POSITIVE SIGN SIGNIFIES LOADS ACTING TOWARD THE SURFACE. NEGATIVE LOADS SIGNIFY LOADS ACTING AWAY FROM THE SURFACE.
3. COMPONENT & CLADDING PRESSURES SHOWN FOR "OVERHANGS" INCLUDES WIND PRESSURE FROM BOTH UPPER AND LOWER SURFACES OF THE ROOF OVERHANG. WHERE INDEPENDENTLY FRAMED SOFFITS ARE PROVIDED, THE SOFFIT SYSTEM (UNDERSIDE OF OVERHANG) MAY BE DESIGNED USING BOTH POSITIVE AND NEGATIVE COMPONENT PRESSURES SHOWN FOR WALLS (ZONE 4 & 5).

TABLE–2

"OPEN STRUCTURE" WITH CLEAR WIND FLOW
GABLE ROOF (8:12)
MEAN ROOF HT. = 25 FT.

ZONE	TRIBUTARY AREA (SQFT)	COMPONENT PRESSURE (PSF) POSITIVE (+)	NEGATIVE (–)
1	≤36	+52.5	–36.8
	≥36,≤144	+52.5	–36.8
	>144	+52.5	–36.8
2	≤9	+80.9	–56.7
	>9,≤36	+80.9	–56.7
	>36	+52.5	–36.8
3	≤9	+105.1	–73.5
	>9,≤36	+80.9	–56.7
	>36	+52.5	–36.8

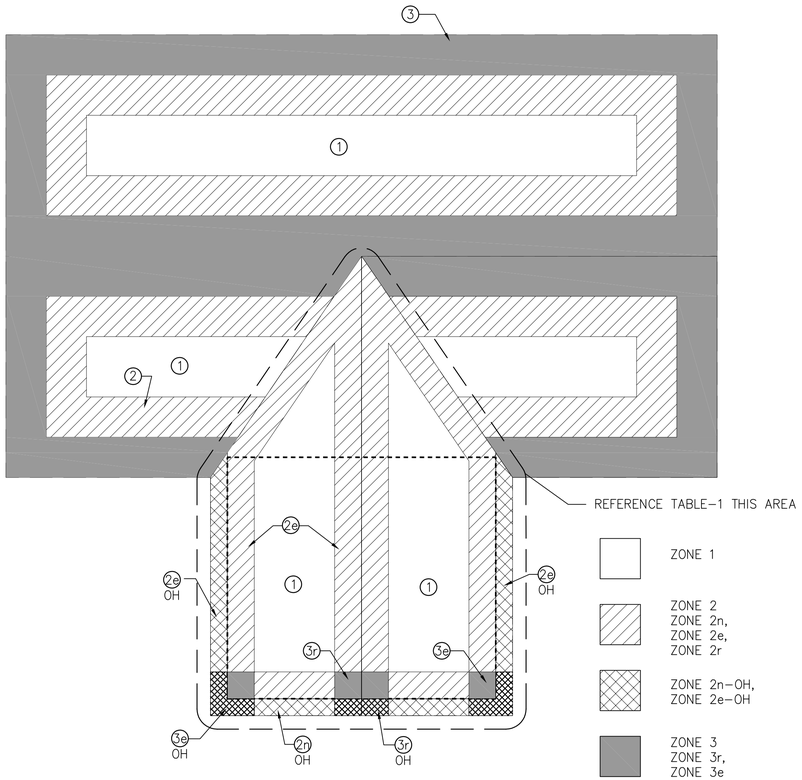

ROOF WIND PRESSURE DIAGRAM

DETAIL 1 / S0.1
NOT TO SCALE

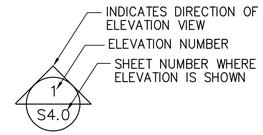

ELEVATION KEY

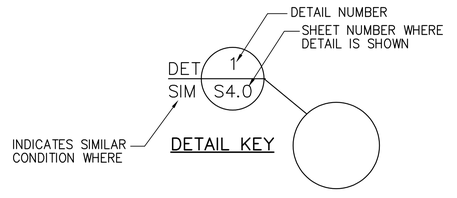

DETAIL KEY

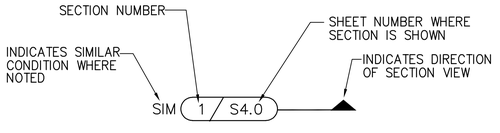

SECTION KEY

MEMBER DEPTH:
(EXAMPLE: 6" = 600x1/100) ALL MEMBER DEPTHS ARE TAKEN IN 1/100 INCHES. FOR ALL "T" SECTIONS MEMBER DEPTH IS THE INSIDE TO INSIDE DIMENSION.

FLANGE WIDTH:
(EXAMPLE: 1 5/8" = 1625X1/100 INCHES) ALL FLANGE WIDTHS ARE TAKEN IN 1/100 INCHES

600 S 162 – 54

STYLE:
(EXAMPLE: STUD OR JOIST SECTION = S) THE FOUR ALPHA CHARACTERS UTILIZED BY THE DESIGNATOR SYSTEM ARE:
S = STUD OR JOIST SECTIONS
T = TRACK SECTIONS
U = CHANNEL SECTIONS
F = FURRING / HAT SECTIONS

MATERIAL THICKNESS:
(EXAMPLE: 0.054 IN. = 54 MILS;
1 MIL = 1/1000 IN.)
MATERIAL THICKNESS IS THE MINIMUM BASE METAL THICKNESS IN MILS. MINIMUM BASE METAL THICKNESS REPRESENTS 95% OF THE DESIGN THICKNESS.

TYPICAL COLD FORM METAL FRAMING DESIGNATION

WHLC | ARCHITECTURE

ALABAMA LICENSED No. 20131 PROFESSIONAL ENGINEER JAMES A. RUSSELL

06/15/2023

TRANSIT HUB PAVILION

LOXLEY MUNICIPAL PARK
LOXLEY, ALABAMA

washer hill lipscomb cabaniss architecture, llc

copyright 2022

70 south section st fairhope, al
t 251.990.6200

21-205
JUNE 15, 2023
Bid Documents

GENERAL NOTES

S0.1

STRUCTURAL GENERAL NOTES

GENERAL:

1. STRUCTURAL DRAWINGS SHALL BE USED IN CONJUNCTION WITH THE ARCHITECTURAL, MECHANICAL, ELECTRICAL, SHOP DRAWINGS AND SPECIFICATIONS.
2. ALL DIMENSIONS AND CONDITIONS MUST BE VERIFIED IN THE FIELD AND ANY DISCREPANCIES SHALL BE BROUGHT TO THE ATTENTION OF THE ARCHITECT AND/OR ENGINEER FOR CLARIFICATION BEFORE PROCEEDING WITH THE AFFECTED PART OF THE WORK.
3. A RECORD SET OF APPROVED SHOP DRAWINGS SHALL BE KEPT IN THE FIELD BY THE GENERAL CONTRACTOR.
4. THE CONTRACTOR SHALL VERIFY ALL DIMENSIONS AND ELEVATIONS WITH ARCHITECT'S PLANS AND THE EXISTING CONDITIONS BEFORE STARTING WORK.
5. SEE ARCHITECTURAL PLANS FOR EXACT DIMENSIONS FOR OPENINGS IN WALLS AND IN ROOF AND FLOOR SYSTEMS.
6. VERIFY ALL MECHANICAL EQUIPMENT WEIGHTS, LOCATIONS AND ASSOCIATED OPENINGS WITH MECHANICAL CONTRACTOR. NOTIFY ENGINEER IF THE ACTUAL EQUIPMENT WEIGHT EXCEEDS THE DESIGN WEIGHT SHOWN ON THE DRAWINGS.
7. CONTRACTOR SHALL PROVIDE AND MAINTAIN TEMPORARY BRACING, SHORING, GUYING, ETC. AND OTHER METHODS TO PREVENT EXCESSIVE STRESSES DURING CONSTRUCTION. THESE PROVISIONS ARE TO REMAIN IN PLACE UNTIL SUFFICIENT PERMANENT MEMBERS ARE CONSTRUCTED TO ENSURE THE SAFETY OF THE STRUCTURE.
8. UNLESS OTHERWISE NOTED, DETAILS SHOWN ON ANY DRAWING ARE TO BE CONSIDERED TYPICAL FOR ALL SIMILAR CONDITIONS.

SHOP DRAWINGS:

1. THE GENERAL CONTRACTOR SHALL REVIEW AND STAMP ALL SHOP DRAWINGS BEFORE SUBMITTING FOR APPROVAL. SHOP DRAWINGS, REVIEWED BY THE GENERAL CONTRACTOR FOR CONCRETE MATERIALS, REINFORCING STEEL, STRUCTURAL STEEL, AND METAL ROOF TRUSSES SHALL BE SUBMITTED TO THE ARCHITECT AND/OR ENGINEER AND A STAMPED APPROVAL RECEIVED PRIOR TO FABRICATION. INSTALLATION SHALL BE MADE FROM APPROVED SHOP DRAWINGS ONLY.
2. REPRODUCTION & REUSE OF CONTRACT DRAWINGS FOR THE PURPOSE OF PREPARING SHOP DRAWINGS IS STRICTLY PROHIBITED. ELECTRONIC FILES OF THE STRUCTURAL FRAMING PLANS MAY BE PROVIDED FOR THE PURPOSE OF PREPARING SHOP DRAWINGS FOR A NOMINAL FEE OF $100 PER SHEET.
3. THE FABRICATOR SHALL HIGHLIGHT CHANGES MADE IN SHOP DRAWINGS WHICH DO NOT COMPLY WITH THE DESIGN DRAWINGS AND RECEIVE APPROVAL PRIOR TO COMMENCING WITH FABRICATION OF SAME.
4. SHOP DRAWING APPROVAL SHALL NOT CONSTITUTE ACCEPTANCE OF FABRICATOR CHANGES TO THE CONTRACT DOCUMENTS, ONLY GENERAL CONFORMANCE TO THE DESIGN INTENT. FABRICATOR CHANGES THAT RESULT IN MODIFICATIONS TO THE CONTRACT SUM MUST BE APPROVED IN ACCORDANCE WITH PROVISIONS CONTAINED IN THE OWNER–CONTRACTOR AGREEMENT OR PROCEDURES OUTLINED IN THE CONTRACT MANUAL.
5. ONLY SHOP DRAWINGS MARKED "APPROVED" OR "APPROVED AS NOTED" MAY BE RELEASED FOR FABRICATION. SHOP DRAWINGS WITH ANY OTHER MARKINGS MUST BE REVISED AND AN APPROVED COPY RECEIVED BY THE FABRICATOR PRIOR TO FABRICATION OF THE MATERIAL. MATERIAL FABRICATED WITHOUT PROPER APPROVAL IS SUBJECT TO REJECTION.
6. REVIEW OF SHOP DRAWINGS IS FOR CONFORMANCE WITH THE DESIGN CONCEPT OF THE PROJECT AND COMPLIANCE WITH THE CONTRACT DOCUMENTS. THE FABRICATOR IS RESPONSIBLE FOR DIMENSIONS AND QUANTITIES ASSOCIATED WITH THE FABRICATION OF THEIR RESPECTIVE PARTS AND PORTIONS OF THE PROJECT. MEANS AND METHODS ASSOCIATED WITH THE FABRICATION OF ANY MATERIAL SHALL REMAIN THE RESPONSIBILITY OF THE FABRICATOR AS SHALL THE RESPONSIBILITY FOR THE COORDINATION OF INSTALLATION SEQUENCES AFFECTING OTHER TRADES.

FOUNDATIONS/SOILS:

1. FOUNDATION DESIGN IS BASED ON THE INFORMATION CONTAINED IN THE "SOILS EXPLORATION AND GEOTECHNICAL ENGINEERING STUDIES FOR THE PROPOSED LOXLEY MULTI–PURPOSE TRANSIT HUB TO BE LOCATED AT THE LOXLEY MUNICIPAL PARK" IN LOXLEY, ALABAMA" (GET PROJECT NUMBER 22–108) AS PREPARED BY GEOTECHNICAL ENGINEERING TESTING DATED FEBRUARY 4, 2022. PREPARATION OF THE SITE INCLUDING INITIAL CLEARING, FILL / BACKFILL MATERIAL, AND RELATED COMPACTION REQUIREMENTS SHALL BE AS RECOMMENDED IN THE REFERENCED SOILS REPORT.
2. ALL FOOTINGS TO BEAR ON UNDISTURBED EARTH OR PROPERLY COMPACTED STRUCTURAL FILL AT ELEVATIONS SHOWN ON PLANS AND DETAILS.
3. ALL FOOTINGS, OR PORTIONS THEREOF BELOW GRADE, MAY BE EARTH FORMED BY NEAT EXCAVATIONS. WHERE SOILS ARE NOT SUITABLE TO SERVE AS EARTH FORMS OR WHERE THE SOILS SLOUGH INTO THE FOUNDATION EXCAVATIONS, THEN THE SIDES OF THE FOUNDATIONS SHALL BE FORMED.
4. FOOTINGS TO BE CENTERED ON WALLS OR COLUMNS UNLESS NOTED OTHERWISE.
5. SEE SOILS REPORT FOR PREPARATION OF SOILS AT BUILDING PAD. ALL SOILS WORK, INCLUDING BACKFILL OF UTILITY TRENCHES AND THE VERIFICATION OF BEARING CAPACITY OF SOILS, SHALL BE UNDER THE DIRECTION OF A QUALIFIED SOILS ENGINEER. PROXIMITY OF UTILITY TRENCHES TO BUILDING FOUNDATION SYSTEM SHALL BE AS APPROVED BY THE ARCHITECT AND/OR SOILS ENGINEER TO ENSURE INTEGRITY OF THE BEARING SOILS.

   ALLOWABLE NET SOIL BEARING PRESSURES

   INDIVIDUAL SPREAD FOOTINGS = 1,500 PSF
   CONTINUOUS (STRIP) WALL FOOTINGS = 1,500 PSF
6. STEP FOUNDATION LEVELS AS REQUIRED TO MAINTAIN AT LEAST 12–INCH MINIMUM SOIL COVERAGE BY EXISTING NATURAL GRADE OVER THE TOP OF THE FOUNDATION.

CONCRETE WORK:

1. CONCRETE SHALL HAVE THE MINIMUM STRENGTH AND MEET THE PROPERTIES AS DESCRIBED BELOW FOR THE VARIOUS CLASSES OF CONCRETE & GROUT:

MIX TYPE	SUPER P	MAX. SLUMP **	W/C RATIO	% AIR	MAX. AGGR.	COMMENT	LOCATION
2,500 PSI	N/A	8"–10"	-----		3/8"	COARSE GROUT PER ASTM C476	CMU FILL
3,000 PSI	N/A	4" MAX.	0.50 MAX.	4–6			FOUNDATIONS/SLAB
** #/# INDICATES SLUMP PRIOR TO/AFTER ADDITION OF SUPER P TO MIX.							

2. ALL CONCRETE CONSTRUCTION SHALL CONFORM TO THE 2013 "ACI MANUAL OF CONCRETE PRACTICE."
3. PORTLAND CEMENT SHALL CONFORM TO ASTM C 150, TYPE I OR II.
4. ALL AGGREGATE FOR NORMAL WEIGHT CONCRETE SHALL MEET ASTM C33.
5. ALL REINFORCING TO MEET ASTM A 615, GRADE 60.
6. ALL REINFORCING SHALL BE DETAILED, FABRICATED AND PLACED PER CRSI AND ACI STANDARDS, INCLUDING CONCRETE COVER AND BAR SUPPORTS (DESIRED METHOD OF SUPPORTING TOP BARS IN THICK MATS TO BE VERIFIED WITH ENGINEER.) PROVIDE CORNER BARS AT ALL FOOTINGS AND WALL INTERSECTIONS TO MATCH HORIZONTAL REINFORCING IN SIZE AND SPACING. AT INTERSECTIONS OF CONTINUOUS AND SPREAD FOOTINGS EXTEND ALL BARS TO FAR SIDE OF INTERSECTING FOOTING. LAP BARS AT ALL SPLICES, INCLUDING CORNER BARS AND DOWELS, IN ACCORDANCE WITH SPLICE SCHEDULE, OR IN LIEU THEREOF IN ACCORDANCE WITH ACI 318 REQUIREMENTS FOR CLASS "B" TENSION LAPS, 40 BAR DIAMETERS, MIN.
7. ALL FOUNDATION REINFORCING SHALL BE SUPPORTED BY CORROSION TREATED CHAIRS, BOLSTERS, OR ACI APPROVED PRECAST REINFORCING SUPPORTS, WITH APPROPRIATE BASES OR SAND CHAIRS, DO NOT USE CMU BLOCKS, SHARDS, OR BRICKS. REINFORCING OR OTHER METAL BARS OR DEGRADABLE STAKES, DRIVEN INTO THE GROUND WILL NOT BE ALLOWED.
8. CONCRETE PROTECTION FOR REINFORCING: 3" AT FOOTINGS AND GRADE BEAMS; 2" AT FORMED SURFACES LATER EXPOSED TO SOIL;
9. NO ALUMINUM TO BE EMBEDDED IN ANY CONCRETE.
10. NO HOLES OR OPENINGS THROUGH FOOTINGS WITHOUT ENGINEERS APPROVAL.
11. ALL EXPOSED EDGES OF CONCRETE SHALL BE CHAMFERED 3/4".
12. ALL FOOTINGS SHALL HAVE KEYED CONSTRUCTION JOINTS SPACED AT 80 FEET MAXIMUM ON CENTER.

MASONRY:

1. HOLLOW CONCRETE BLOCK (MASONRY) UNITS SHALL CONFORM TO ASTM C 90, LIGHTWEIGHT, TYPE 1 WITH A MINIMUM COMPRESSIVE STRENGTH OF 2,000 PSI ON THE NET AREA AND 1,000 PSI ON THE GROSS AREA (f'm = 2,000psi).
2. ALL MORTAR FOR USE IN MASONRY SHALL CONFORM TO ASTM C 270, TYPE M OR S. ALL GROUT FOR USE IN MASONRY SHALL CONFORM TO ASTM C 476, MIN. 2,500 PSI AND BE NOT LESS THAN A 7 SACK MIX.
3. IN GENERAL, COARSE AGGREGATE GROUT SHALL BE USED FOR ALL NOMINAL CMU SIZES 8" AND ABOVE. FINE AGGREGATE GROUT SHALL BE USED FOR ALL NOMINAL CMU SIZES LESS THAN 8".
4. REINFORCING BARS TO MEET ASTM A 615, GRADE 60.
5. REINFORCE MASONRY AT BEARING POINTS OF ALL BEAMS, LINTELS, ETC. WITH 1–#5 (CONTINUOUS TO FOUNDATION) IN EACH BLOCK CORE BENEATH BEARING PLATES UNLESS NOTED OTHERWISE.
6. PROVIDE AT LEAST 2 VERTICAL BARS AT EACH END, CORNERS, AND INTERSECTIONS OF ALL WALLS AND ADJACENT TO CONTROL JOINTS. SEE WALL SECTIONS AND SCHEDULES FOR TYPICAL VERTICAL REINFORCING.
7. VERTICAL AND HORIZONTAL REINFORCING SHALL BE CONTINUOUS AND LAPPED 48–BAR DIAMETERS, MINIMUM.
8. HOLD VERTICAL BARS STRAIGHT AND TRUE AND ACCURATELY LOCATED IN WALL AS DETAILED. INSTALL REBAR POSITIONERS @ 4'–0" o.c. MAXIMUM THAT ARE DESIGNED TO HOLD REBAR IN PROPER LOCATION WITHIN THE GROUTED CELL.
9. PROVIDE A MINIMUM OF 1/2" GROUT BETWEEN MAIN REINFORCING AND MASONRY UNITS.
10. PROVIDE STANDARD NO. 9 GAGE LADDER TYPE JOINT REINFORCEMENT AT 16"o.c. FOR TYPICAL HORIZONTAL REINFORCING IN BACKUP WYTHE.
11. ALL REINFORCED MASONRY COLUMN AND WALL SECTIONS REQUIRE DOWELS FROM FOOTING, SAME SIZE AND QUANTITY AS VERTICAL REINFORCEMENT.
12. GROUT FILL ALL CELLS, ALL WALLS BELOW GRADE. SLUSH JOINT BETWEEN WYTHES BELOW GRADE.
13. ALL CMU TO BE LAID IN RUNNING BOND PATTERN.
14. THE CONTRACTOR SHALL DESIGN, FABRICATE AND INSTALL BRACING THAT WILL ASSURE THE STABILITY OF THE MASONRY DURING CONSTRUCTION.
15. LOW–LIFT GROUTING SHALL BE USED FOR ALL REINFORCED MASONRY CONSTRUCTION. LIMIT MAXIMUM GROUT LIFTS TO 5'–0" MAX.
16. THE TOP OF EACH GROUT POUR SHALL BE 1" BELOW THE BED JOINT.
17. REINFORCEMENT, REBAR POSITIONERS, AND TIES SHALL BE PLACED PRIOR TO GROUTING.

STEEL:

1. STRUCTURAL STEEL SHALL MEET THE LATEST AISC "SPECIFICATION FOR THE DESIGN, FABRICATION AND ERECTION OF STRUCTURAL STEEL FOR BUILDINGS".
2. ALL STRUCTURAL STEEL EXPOSED TO VIEW SHALL MEET THE REQUIREMENTS OF "ARCHITECTURALLY EXPOSED STRUCTURAL STEEL".
3. ALL WIDE FLANGE SHAPES TO MEET ASTM A992 – fy = 50ksi. ALL OTHER SHAPES, PLATES, ANGLES, ETC. TO MEET ASTM A36 – fy = 36ksi. ALL TUBING TO MEET ASTM A500, GRADE B – fy = 46ksi. ALL PIPES TO MEET ASTM A53, GRADE B – fy = 35ksi.
4. ALL BOLTS TO MEET ASTM A325 HIGH STRENGTH, WITH WASHERS AS REQUIRED, (EXCEPT ANCHOR BOLTS TO MEET ASTM F1554 GRADE 55).
5. ANCHOR BOLTS SHALL NOT BE MODIFIED UNLESS APPROVED BY ENGINEER.
6. ALL BEAMS AND DIAGONAL BRACING SHALL NOT BE RELEASED FROM THE HOIST CABLE UNTIL THE MEMBER IS SECURED BY A MINIMUM OF TWO BOLTS PER END.
7. WELDING SHALL CONFORM TO THE STANDARDS SET FORTH IN AWS D1.0 PUBLICATION "CODE FOR WELDING IN BUILDING CONSTRUCTION".
8. ALL SHOP CONNECTIONS TO HAVE 1/4" FILLET WELDS MINIMUM UNLESS NOTED AS BOLTED CONNECTIONS.
9. CONNECTIONS OF MATERIAL IN THE FIELD SHALL BE WITH A 1/4" FILLET WELD MINIMUM UNLESS NOTED OTHERWISE. MATERIAL SHOWN TOUCHING SHALL BE CONNECTED WITH 1/4" CONTINUOUS FILLET WELDS UNLESS NOTED OTHERWISE.
10. ALL FIELD WELDS TO BE WITH E70XX ELECTRODES. BRUSH AND CLEAN ALL FIELD WELDS AND COAT WITH A COLD–GALVANIZING REPAIR PRIMER.
11. ALL ERECTION DRAWINGS SHALL SHOW ALL FIELD WELDS REQUIRED.
12. ELEVATIONS FOR TOP OF STEEL ARE NOTED ON DRAWINGS. BEAMS FRAME FLUSH AT TOP UNLESS NOTED (+/–).
13. ALL STRUCTURAL STEEL SHALL HAVE THE FOLLOWING SURFACE PREPARATION IN ACCORDANCE WITH THE STRUCTURAL STEEL PAINTING COUNCIL REQUIREMENTS FOR THE FOLLOWING GRADE:
    SSPC–6: "COMMERCIAL BLAST CLEANING".
14. ALL STRUCTURAL STEEL SHALL BE SHIPPED WITH ONE COAT OF GRAY SHOP PRIMER EXCEPT THOSE MEMBERS THAT ARE GALVANIZED. REFERENCE ARCHITECTURAL FOR HIGH PERFORMANCE COATING SYSTEM FOR STRUCTURAL STEEL EXPOSED TO VIEW.
15. NO OPENINGS TO BE PLACED IN BEAM WEBS OR FLANGES WITHOUT ENGINEER'S APPROVAL.
16. THE STEEL FRAME IS "NON–SELF SUPPORTING". ADEQUATE TEMPORARY SUPPORT MUST BE PROVIDED BY THE CONTRACTOR UNTIL REQUIRED CONNECTIONS OR ELEMENTS ARE IN PLACE.
17. THE FOLLOWING MINIMUM INSPECTION SHALL BE PROVIDED FOR FIELD WELDS:
    a. FIELD WELDED MOMENT CONNECTIONS – 100% VISUAL INSPECTION
    b. WELDED CONNECTION OF PRIMARY STEEL STRUCTURE TO EMBEDMENTS CAST INTO CONCRETE OR MASONRY STRUCTURE – 100% VISUAL INSPECTION
    c. WELDS OF STRUCTURAL TUBE OR ANGLE BRACING – 100% VISUAL INSPECTION
18. CAP ALL OPEN–ENDED HSS SECTIONS WITH A PLATE EQUAL TO THE WALL THICKNESS (1/4" MIN. THICK.) AND SEAL WELD WITH A 1/4" FILLET WELD ALL AROUND, UNO.

ROOF DECKING (Pavilion):

1. STEEL ROOF DECK FOR THE OPEN PAVILION TO BE 1 1/2"–18 GAGE METAL ROOF DECK WITH G90 GALVANIZED COATING. BOTTOM SURFACE OF DECK (EXPOSED FACE) SHALL HAVE A BAKED ON WHITE PRIMER. ERECT PER MANUFACTURER'S SPECIFICATIONS.
2. STEEL ROOF DECK SHALL BE FASTENED WITH #12 SCREWS IN A 36/7 PATTERN WITH SIDE SEAMS ATTACHED WITH #10 TEK SCREWS AT 24"o.c. (4 PER SPAN), UNLESS NOTED OTHERWISE ON DRAWINGS. DECK SHALL BE SCREWED AT ALL PERIMETER EDGES AND CHANGES OF DECK DIRECTION AT 6"o.c MAX.
3. SCREWS USED TO FASTEN ROOF DECK TO SUPPORTS SHALL HAVE MINIMUM 0.40–INCH HEAD DIAMETER OR EQUIVALENT WASHER.
4. STEEL DECK SHALL BE ATTACHED TO ALL MEMBERS ON WHICH IT BEARS.

BARTER & ASSOCIATES, INC.
Structural Engineers
1614 GOVERNMENT ST.
MOBILE, AL 36604-1102
PH. 251-473-8354
FAX 251-473-8356

© Copyright 2022, Barter & Associates, Inc.

WHLC | ARCHITECTURE

ALABAMA LICENSED No. 20131 PROFESSIONAL ENGINEER JAMES A. RUSSELL

06/15/2023

TRANSIT HUB PAVILION

LOXLEY MUNICIPAL PARK
LOXLEY, ALABAMA

washer hill lipscomb cabaniss architecture, llc

copyright 2022

70 south section st fairhope, al
t 251.990.6200

21-205
JUNE 15, 2023
Bid Documents

GENERAL NOTES

S0.2

LUMBER & SHEATHING

1. UNLESS NOTED OTHERWISE, ALL LUMBER SHALL BE #2 KD (KILN DRIED) SOUTHERN YELLOW PINE WITH A MAXIMUM MOISTURE CONTENT OF 19 PERCENT.
2. ALL LUMBER IN CONTACT WITH CONCRETE OR MASONRY SHALL BE PRESSURE TREATED. ALL LUMBER EXPOSED TO EXTERIOR ENVIRONMENT SHALL BE PRESSURE TREATED.
3. ALL ANCHOR BOLTS FOR ANCHORING TREATED SILL PLATES SHALL BE HOT-DIPPED GALVANIZED ACCORDING TO ASTM 153 (MIN. G90 COATING).
4. ALL NAILS, SCREWS, BOLTS AND OTHER FASTENERS IN CONTACT WITH TREATED WOOD SHALL BE HOT-DIPPED GALVANIZED ACCORDING TO ASTM 153 (MIN. G90 COATING), OR STAINLESS STEEL.
5. ALL CLIPS, STRAPS, OR OTHER PRE MANUFACTURED MATERIAL SHALL BE MANUFACTURED BY SIMPSON STRONG TIE, INC. AND SHALL HAVE A Z-MAX COATING (G185 COATING).
6. ALL CONNECTORS AND HARDWARE SHALL BE INSTALLED IN STRICT COMPLIANCE WITH THE MANUFACTURER'S RECOMMENDATIONS. SIZE, QUANTITY, AND LOCATION OF NAILS AND FASTENERS SHALL CONFORM TO THE MANUFACTURER'S PUBLISHED LITERATURE.
7. ALL PLYWOOD SHALL BE APA RATED SHEATHING.
8. ROOF DECK SHALL BE MINIMUM 19/32" EXTERIOR EXP. 1 PLYWOOD ATTACHED WITH 8d RING SHANK NAILS AT 6"o.c. AT SUPPORTS AND PERIMETER EDGES WITH FIELD NAILING AT 6"o.c. SPECIAL FASTENING REQUIREMENTS WITHIN 4 FEET OF ROOF HIPS, RIDGES, VALLEYS, AND EDGE OF ROOF SHALL BE WITH 8d RING SHANK NAILS AT 4"o.c. AT PANEL EDGES AND 4"o.c. IN FIELD. INSTALL SIMPSON PSC CLIPS OR USP MODEL PC SHEATHING CLIPS AT ALL UNSUPPORTED EDGES OF ROOF DECK (ONE PER SPAN). SEE ROOF SHEATHING ATTACHMENT PLAN THIS SHEET.
9. UNLESS NOTED OTHERWISE, ALL EXTERIOR WALL SHEATHING AND SHEATHING FOR PLYWOOD COVERED SHEARWALLS TO BE 15/32" EXTERIOR APA RATED PLYWOOD SHEATHING ATTACHED DIRECTLY TO WALL FRAMING MEMBERS. BLOCK ALL UNSUPPORTED PANEL EDGES AND FASTEN PLYWOOD DIRECTLY TO FRAMING USING 8d NAILS @ 6"o.c. ALONG PANEL EDGES AND BOUNDARIES WITH "FIELD" NAILING AT 6"o.c.

PREFABRICATED WOOD ROOF TRUSSES:

1. ALL PREFABRICATED WOOD TRUSSES SHALL BE DESIGNED TO MEET THE LOADS SPECIFIED. FABRICATION AND ERECTION SHALL BE PER TRUSS PLATE INSTITUTE RECOMMENDATIONS AS CONTAINED IN THE APPROPRIATE PUBLICATIONS.
2. SHOP DRAWINGS AND CALCULATIONS SHALL BE SUBMITTED FOR EACH TYPE OF TRUSS SPECIFIED AND SHALL BEAR THE SEAL OF A REGISTERED PROFESSIONAL ENGINEER LICENSED IN THE STATE OF ALABAMA.
3. ALL LUMBER USED IN THE MANUFACTURING OF THE ROOF TRUSSES SHALL BE #2 KD SOUTHERN PINE OR BETTER. WEB MEMBERS FOR ROOF TRUSSES MAY BE #3 GRADE OR BETTER.
4. TOP AND BOTTOM CHORDS SHALL BE 2x6 MINIMUM
5. COORDINATE TRUSS WEB CONFIGURATION WITH MECHANICAL DUCTWORK AS INDICATED ON MECHANICAL SHEETS. PROVIDE CLEAR SPACE BETWEEN WEBS, AS REQUIRED TO INSTALL DUCTWORK.
6. PROVIDE ALL TEMPORARY AND PERMANENT TRUSS BRACING AND BRIDGING AS REQUIRED AND SHOWN ON THE TRUSS MANUFACTURERS SHOP DRAWINGS.
7. PROVIDE 2x4 DIAGONAL BRACING AT ROOF TRUSS VERTICALS WHERE INDICATED, ON SECTIONS, DETAILS, OR TRUSS ELEVATION SCHEMATICS.
8. INSTALL STRONG BACKS, BRACING AND/OR BRIDGING PRIOR TO DECK INSTALLATION AND AS TRUSSES ARE ERECTED.
9. INSTALL 2x4 CONTINUOUS BOTTOM CHORD BRACING AT 4 FEET o.c. MAXIMUM AT ALL AREAS WHERE A RIGID CEILING IS NOT ATTACHED DIRECTLY TO THE TRUSS BOTTOM CHORD.
10. CONNECTIONS OF HIP TRUSSES SHALL BE WITH APPROPRIATE TRUSS HANGERS AS REQUIRED TO SUPPORT THE LOADS SPECIFIED.
11. AT THE COMPLETION OF FABRICATION, THE TRUSS MANUFACTURER SHALL SUBMIT A CERTIFICATE OF COMPLIANCE STATING THAT THE TRUSSES ARE FABRICATED ACCORDING TO THE APPROVED SHOP DRAWINGS.

TIMBER ROOF DECKING (OVERHANG DECKING)

1. WOOD ROOF DECKING SHALL BE NOMINAL 2-INCH SOUTHERN PINE "SELECT QUALITY", TONGUE & GROOVE END MATCHED WITH AN AWPA UC3A OR WOLMAN ERAWOOD TREATMENT. MAXIMUM MOISTURE CONTENT SHALL BE 15%.
2. WOOD DECKING AND INSTALLATION SHALL COMPLY WITH "AITC 112-93".
3. LAYUP PATTERN SHALL BE COMBINATION SIMPLE AND TWO-SPAN CONTINUOUS.
4. EACH PIECE OF 2-INCH DECKING SHALL BE TOE-NAILED THROUGH THE TONGUE AND FACE NAILED WITH TWO NAILS PER SUPPORT USING 16d GALVANIZED COMMON NAILS.
5. ROOF DECK OVERLAY SHALL BE MINIMUM 19/32" APA RATED PLYWOOD SHEATHING ATTACHED WITH 8d RING SHANK NAILS AS SPECIFIED.

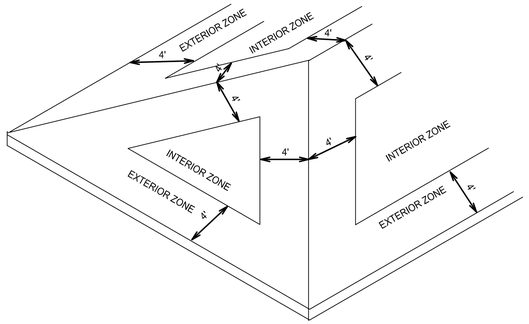

19/32" EXTERIOR GRADE PLYWOOD WITH MAXIMUM NAIL SPACING FOR 8d RING SHANK NAILS

TRUSS / RAFTERS SPACED @ 24" O.C.

INTERIOR ZONE	EXTERIOR ZONE
6" O.C. EDGE NAILING	4" O.C. EDGE NAILING
6" O.C. FIELD NAILING	4" O.C. FIELD NAILING

ROOF SHEATHING ATTACHMENT

DETAIL 1

BARTER & ASSOCIATES, INC.
Structural Engineers
1614 GOVERNMENT ST.
MOBILE, AL 36604-1102
PH. 251-473-8354
FAX 251-473-8356

© Copyright 2022, Barter & Associates, Inc.

WHLC | ARCHITECTURE

ALABAMA LICENSED No. 20131 PROFESSIONAL ENGINEER JAMES A. RUSSELL

06/15/2023

TRANSIT HUB PAVILION

LOXLEY MUNICIPAL PARK
LOXLEY, ALABAMA

washer hill lipscomb cabaniss architecture, llc

copyright 2022

70 south section st fairhope, al
t 251.990.6200

21-205
JUNE 15, 2023
Bid Documents

GENERAL NOTES

S0.3

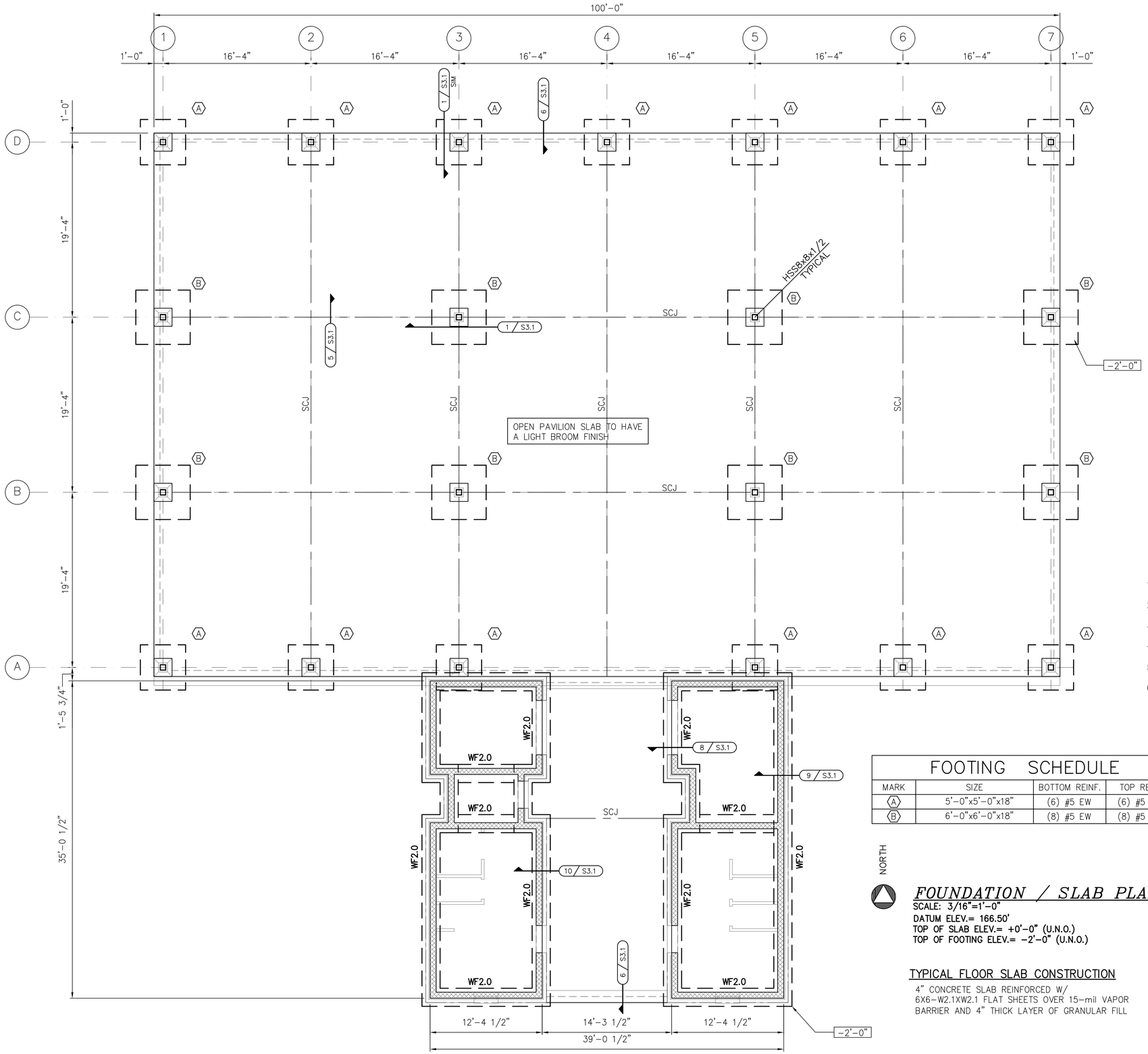

PLAN NOTES:

1. DIMENSIONS ARE TO OUTSIDE FACE OF CMU, OR COLUMN CENTERLINE UNLESS NOTED OTHERWISE.
2. REFERENCE ARCHITECTURAL DRAWINGS FOR LOCATIONS AND SIZES OF WALL OPENINGS.
3. REFERENCE ARCHITECTURAL DRAWINGS FOR SCORING PATTERN OF EXTERIOR EXPOSED SLABS.
4. REFER TO DETAIL 1/S2.1 FOR TYPICAL MASONRY WALL REINFORCEMENT DIAGRAM.
5. SLOPE SLAB TOWARD FLOOR DRAINS AT A RATE OF 1/8" PER FOOT.
6. EXTERIOR SLABS TO HAVE A LIGHT BROOM FINISH.

FOOTING SCHEDULE

MARK	SIZE	BOTTOM REINF.	TOP REINF.
(A)	5'-0"x5'-0"x18"	(6) #5 EW	(6) #5 EW
(B)	6'-0"x6'-0"x18"	(8) #5 EW	(8) #5 EW

NORTH

FOUNDATION / SLAB PLAN

SCALE: 3/16"=1'-0"
DATUM ELEV.= 166.50'
TOP OF SLAB ELEV.= +0'-0" (U.N.O.)
TOP OF FOOTING ELEV.= -2'-0" (U.N.O.)

TYPICAL FLOOR SLAB CONSTRUCTION

4" CONCRETE SLAB REINFORCED W/ 6X6-W2.1XW2.1 FLAT SHEETS OVER 15-mil VAPOR BARRIER AND 4" THICK LAYER OF GRANULAR FILL

LEGEND

000'-0"	TOP OF FOOTING ELEVATION
SCJ	SLAB CONTROL / CONSTRUCTION JOINTS – SEE DETAIL 5/S3.1
(B)	FOOTING TYPE – SEE SCHEDULE SHEET S1.1
+0'-0"	ELEVATION, TOP OF SLAB
WF2.0	WALL FOOTING TYPE
	FACE OF BRICK LOCATION

BARTER & ASSOCIATES, INC.
Structural Engineers
1614 GOVERNMENT ST.
MOBILE, AL 36604-1102
PH. 251-473-8354
FAX 251-473-8356

© Copyright 2022, Barter & Associates, Inc.

WHLC | ARCHITECTURE

ALABAMA LICENSED No. 20131 PROFESSIONAL ENGINEER JAMES A. RUSSELL

06/15/2023

TRANSIT HUB PAVILION

LOXLEY MUNICIPAL PARK
LOXLEY, ALABAMA

washer hill lipscomb cabaniss architecture, llc

copyright 2022

70 south section st fairhope, al
t 251.990.6200

21-205
JUNE 15, 2023
Bid Documents

FOUNDATION/ SLAB PLAN

S1.1

BARTER & ASSOCIATES, INC.
Structural Engineers
1614 GOVERNMENT ST.
MOBILE, AL 33604-1102
PH. 251-473-8354
FAX 251-473-8356

© Copyright 2022, Barter & Associates, Inc.

WHLC | ARCHITECTURE

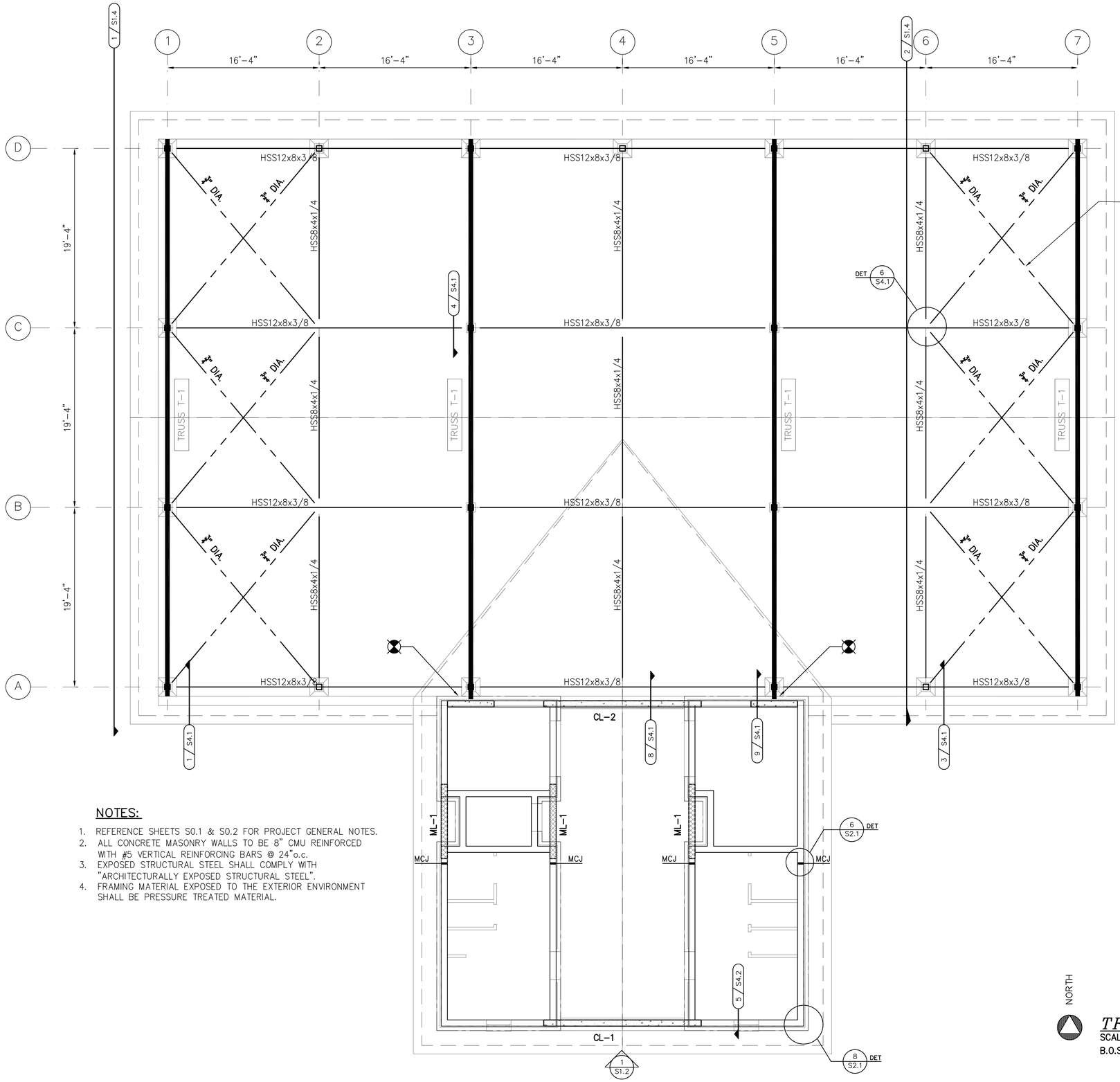

3/4" DIA. GRADE 36 BRACING RODS WITH CLEVIS EACH END AND TURNBUCKLE FOR ADJUSTMENT, TYP.

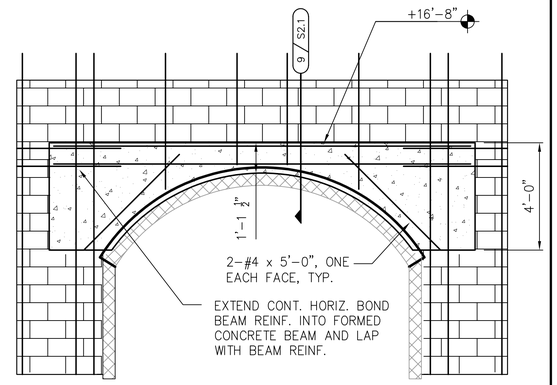

"CL-1" ARCHED BOTTOM CONCRETE LINTEL

DETAIL 1 / S1.2
SCALE: 3/8"=1'-0"

NOTES:

1. REFERENCE SHEETS S0.1 & S0.2 FOR PROJECT GENERAL NOTES.
2. ALL CONCRETE MASONRY WALLS TO BE 8" CMU REINFORCED WITH #5 VERTICAL REINFORCING BARS @ 24"o.c.
3. EXPOSED STRUCTURAL STEEL SHALL COMPLY WITH "ARCHITECTURALLY EXPOSED STRUCTURAL STEEL".
4. FRAMING MATERIAL EXPOSED TO THE EXTERIOR ENVIRONMENT SHALL BE PRESSURE TREATED MATERIAL.

LEGEND

MCJ	MASONRY CONTROL JOINT – SEE DETAIL 6/S2.1
	STEEL ROOF TRUSS
	FACE OF BRICK LOCATION
ML-1	REINFORCED MASONRY LINTEL REFERENCE SCHEDULE SHEET S2.1
CL-1	REINFORCED CONCRETE LINTEL – ARCHED BOTTOM
	STRUCTURAL ROD BRACING LOCATIONS
	LATERAL CONNECTION OF PAVILION STRUCTURE TO MASONRY BUILDING, SEE SECTION 8/S4.1

NORTH

TRUSS BOTTOM CHORD BRACING PLAN
SCALE: 3/16"=1'-0"
B.O.S.= +14'-0"

ALABAMA LICENSED No. 20131 PROFESSIONAL ENGINEER JAMES A. RUSSELL
06/15/2023

TRANSIT HUB PAVILION

LOXLEY MUNICIPAL PARK
LOXLEY, ALABAMA

washer hill lipscomb cabaniss architecture, llc
copyright 2022
70 south section st fairhope, al
t 251.990.6200

21-205
JUNE 15, 2023
Bid Documents

TRUSS BOTTOM CHORD BRACING PLAN

S1.2

BARTER & ASSOCIATES, INC.
Structural Engineers
1614 GOVERNMENT ST.
MOBILE, AL 33604-1102
PH. 251-473-8354
FAX 251-473-8356

© Copyright 2022, Barter & Associates, Inc.

WHLC | ARCHITECTURE

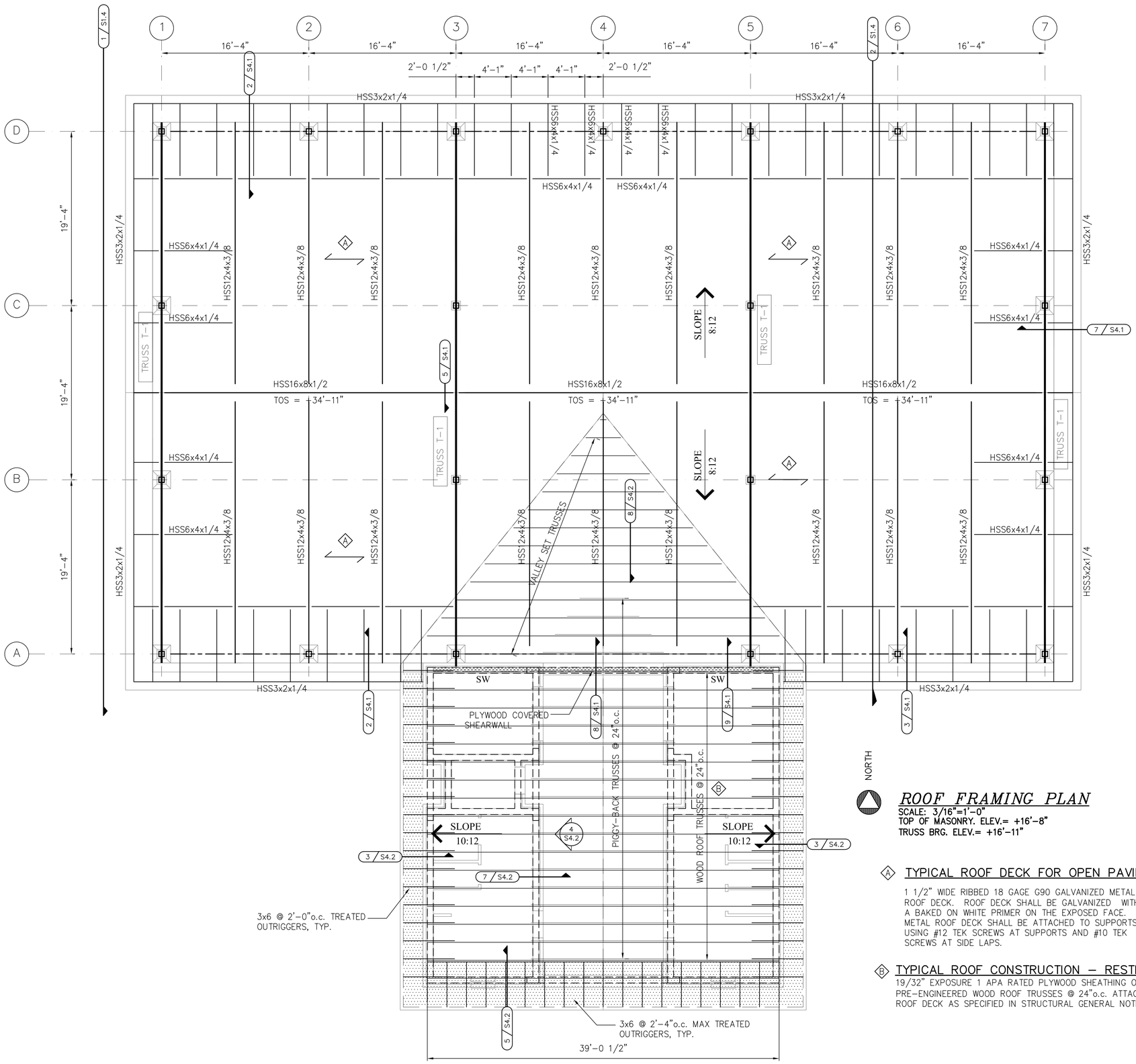

ROOF FRAMING PLAN

SCALE: 3/16"=1'-0"
TOP OF MASONRY. ELEV.= +16'-8"
TRUSS BRG. ELEV.= +16'-11"

NOTES:

1. REFERENCE SHEETS S0.1 & S0.2 FOR PROJECT GENERAL NOTES.
2. EXPOSED STRUCTURAL STEEL SHALL COMPLY WITH "ARCHITECTURALLY EXPOSED STRUCTURAL STEEL".
3. REFERENCE ARCHITECTURAL / SPECIFICATIONS FOR FIELD APPLIED PAINT SYSTEM FOR ALL EXPOSED TO VIEW FRAMING.
4. ALL ROOF TRUSSES @ 24"o.c. MAX, UNLESS NOTED.
5. USE ONLY RING SHANK NAILS FOR FASTENING ROOF DECKING.
6. REFERENCE DETAIL 1/S4.2 FOR WOOD ROOF TRUSS DESIGN LOADING.
7. VERIFY TRUSS LAYOUT WITH FINAL APPROVED TRUSS SHOP DRAWINGS. COORDINATE PLACEMENT AND SPACING OF TRUSSES WITH MECHANICAL SYSTEM.
8. FRAMING MATERIAL EXPOSED TO THE EXTERIOR ENVIRONMENT SHALL BE PRESSURE TREATED MATERIAL.

LEGEND

- INDICATES DECK ORIENTATION
- SW — PLYWOOD COVERED SHEARWALL
- OVERHANG AREA HAVING 2" NOMINAL EXPOSED DECKING

A TYPICAL ROOF DECK FOR OPEN PAVILION

1 1/2" WIDE RIBBED 18 GAGE G90 GALVANIZED METAL ROOF DECK. ROOF DECK SHALL BE GALVANIZED WITH A BAKED ON WHITE PRIMER ON THE EXPOSED FACE. METAL ROOF DECK SHALL BE ATTACHED TO SUPPORTS USING #12 TEK SCREWS AT SUPPORTS AND #10 TEK SCREWS AT SIDE LAPS.

B TYPICAL ROOF CONSTRUCTION – RESTROOMS

19/32" EXPOSURE 1 APA RATED PLYWOOD SHEATHING OVER PRE-ENGINEERED WOOD ROOF TRUSSES @ 24"o.c. ATTACH ROOF DECK AS SPECIFIED IN STRUCTURAL GENERAL NOTES.

ALABAMA LICENSED No. 20131 PROFESSIONAL ENGINEER JAMES A. RUSSELL
06/15/2023

TRANSIT HUB PAVILION

LOXLEY MUNICIPAL PARK
LOXLEY, ALABAMA

washer hill lipscomb cabaniss architecture, llc
copyright 2022
70 south section st fairhope, al
t 251.990.6200

21-205
JUNE 15, 2023
Bid Documents

ROOF FRAMING PLAN

S1.3

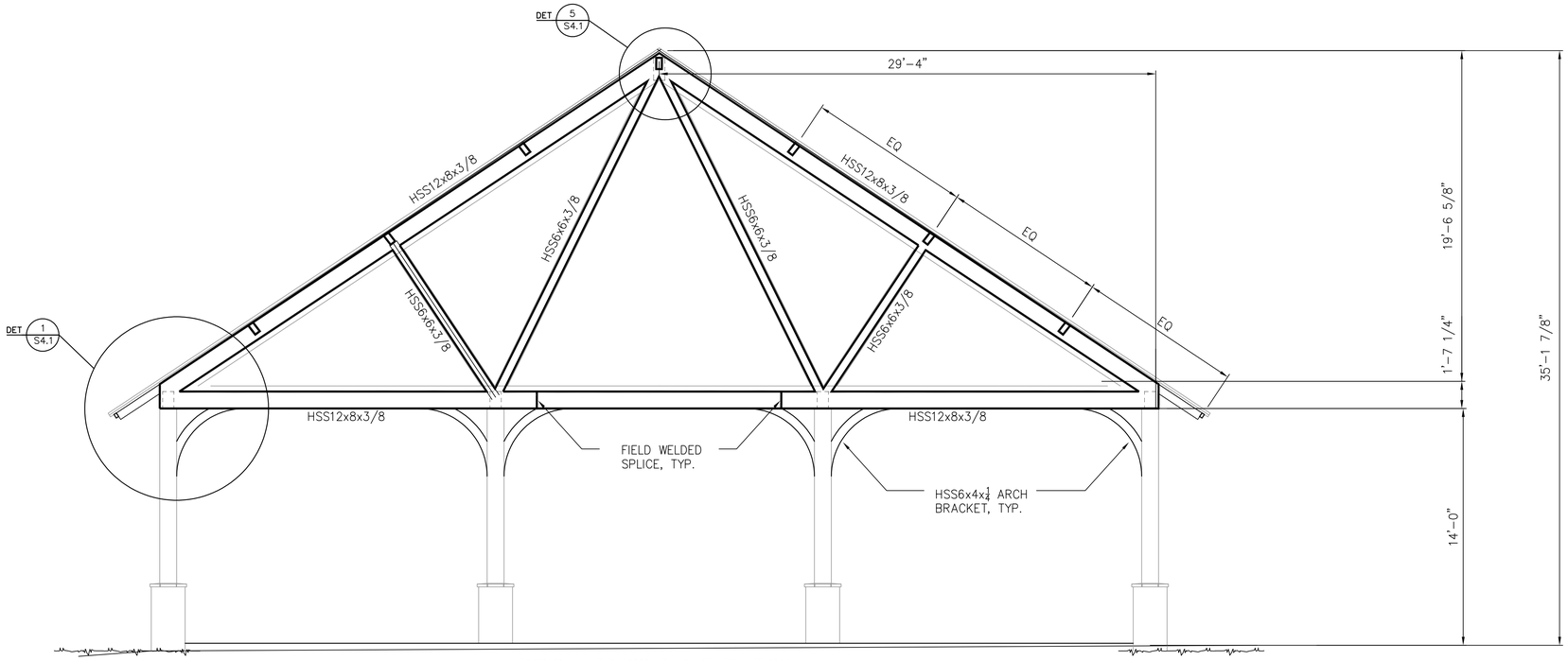

TYPICAL TRUSS T-1 ELEVATION

SECTION 1 / S1.4

SCALE: 1/4"=1'-0"

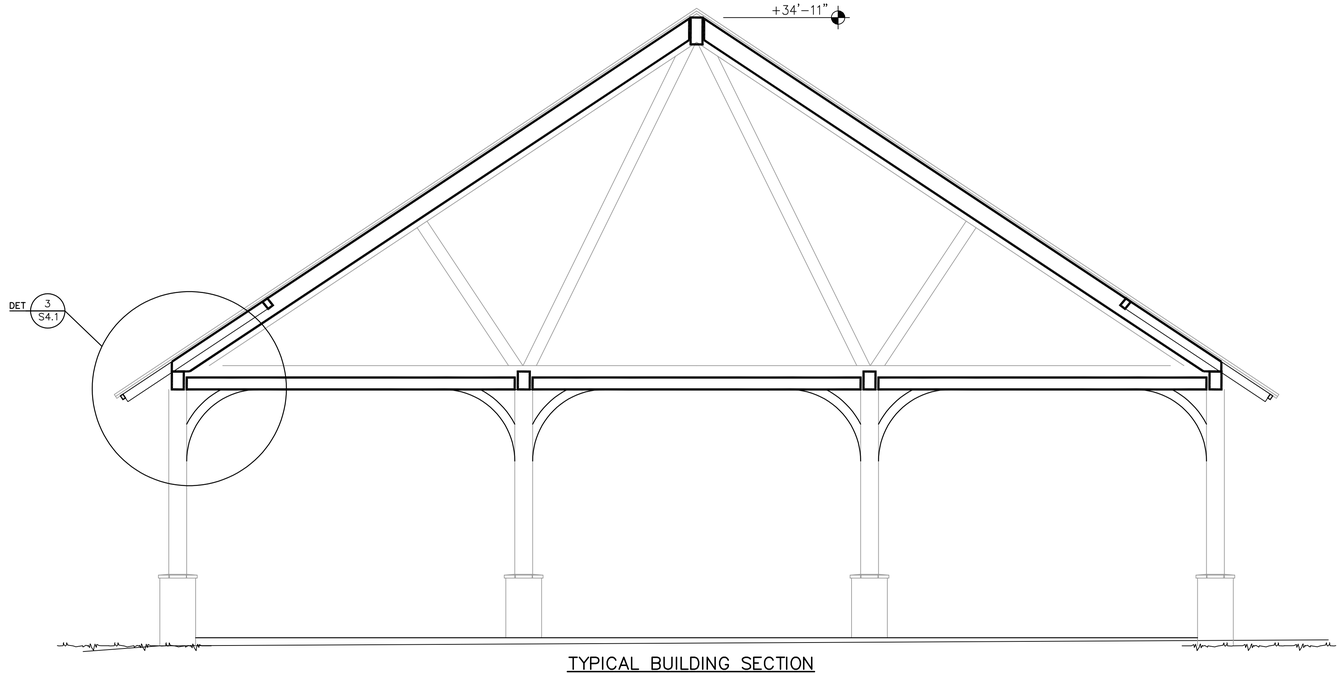

TYPICAL BUILDING SECTION

SECTION 2 / S1.4

SCALE: 1/4"=1'-0"

NOTES:

1. REFERENCE SHEETS S0.1 & S0.2 FOR PROJECT GENERAL NOTES.
2. EXPOSED STRUCTURAL STEEL SHALL COMPLY WITH "ARCHITECTURALLY EXPOSED STRUCTURAL STEEL".
3. ALL TRUSS WELDS SHALL BE CONTINUOUS ¼" FILLET OR EQUIVALENT FLARE BEVEL WELDS UNLESS NOTED OTHERWISE.
4. SPLICES IN TRUSS TOP OR BOTTOM CHORD MEMBERS SHALL BE WITH A PRE-QUALIFIED COMPLETE JOINT PENETRATION WELD. GRIND SMOOTH FOR FINISH APPEARANCE.
5. REFERENCE ARCHITECTURAL / SPECIFICATIONS FOR FIELD APPLIED PAINT SYSTEM FOR ALL EXPOSED TO VIEW FRAMING.

BARTER & ASSOCIATES, INC.
Structural Engineers
1614 GOVERNMENT ST.
MOBILE, AL 35604-1102
PH. 251-473-8354
FAX 251-473-8356

© Copyright 2022, Barter & Associates, Inc.

WHLC | ARCHITECTURE

ALABAMA LICENSED No. 20131 PROFESSIONAL ENGINEER JAMES A. RUSSELL

06/15/2023

TRANSIT HUB PAVILION

LOXLEY MUNICIPAL PARK
LOXLEY, ALABAMA

washer hill lipscomb cabaniss architecture, llc
copyright 2022
70 south section st fairhope, al
t 251.990.6200

21-205
JUNE 15, 2023
Bid Documents

STRUCTURAL TRUSS ELEVATIONS

S1.4

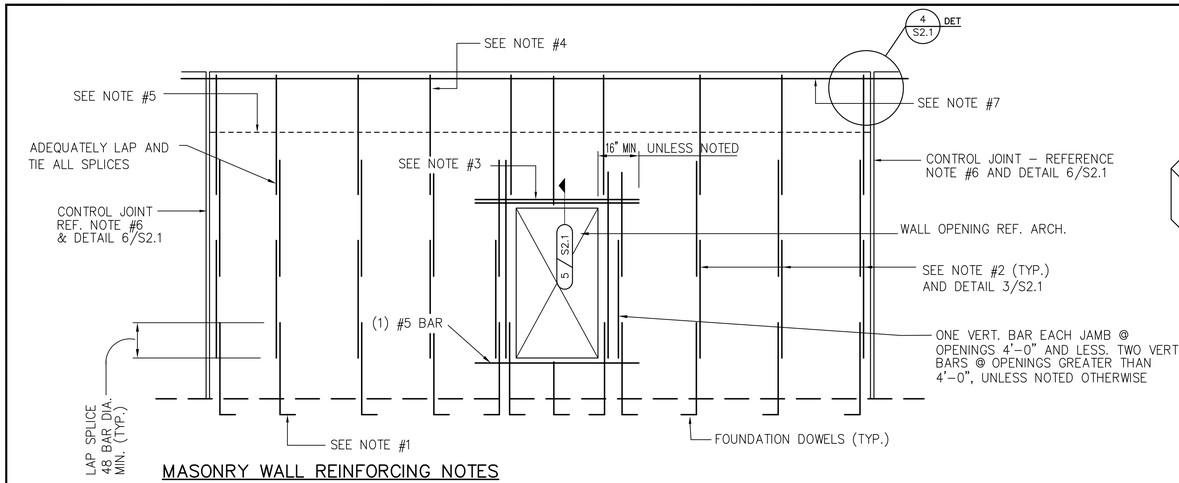

MASONRY WALL REINFORCING NOTES

1. VERTICAL WALL REINFORCING SHALL ALIGN WITH VERTICAL FOUNDATION DOWELS. DOWELS SHALL BE PLACED IN CENTER OF CMU WALL WITH ACI STANDARD HOOK. PLACE HOOKS DIRECTLY ON TOP OF BOTTOM LAYER OF FOOTING REINFORCING.
2. TYPICAL VERTICAL WALL REINFORCEMENT TO BE PLACED IN CENTER OF WALL. GROUT CELLS FULL THAT CONTAIN REINFORCEMENT. FOR CLARITY, ALL VERTICAL AND HORIZONTAL REINFORCING IS SHOWN CONTINUOUS, HOWEVER VERTICAL REINFORCEMENT SHALL BE LAPPED AND SPLICED TO ACCOMODATE MAXIMUM GROUT LIFTS OF 4'–8" AND HORIZONTAL BARS SHALL BE LAPPED AND SPLICED AS REQUIRED. ALL VERTICAL BARS SHALL BE ACCURATELY LOCATED WITHIN THE CELL WITH REBAR POSITIONERS PRIOR TO PLACING GROUT IN CELLS. ALL LAPS SHALL BE 48 BAR DIAMETERS UNLESS NOTED OTHERWISE.
3. REFERENCE MASONRY LINTEL SCHEDULE FOR SIZE, LOCATION AND QUANTITY OF LINTEL REINFORCEMENT.
4. ALL VERTICAL REINFORCING SHALL STOP 2" CLEAR FROM TOP OF WALL UNLESS NOTED.
5. HORIZONTAL JOINT REINFORCING SHALL BE LADDER TYPE AT 16"o.c. – DISCONTINUE AT CONTROL JOINTS.
6. MASONRY CONTROL JOINTS SHALL BE DISCONTINUOUS AT ALL BOND BEAMS AND SHALL NOT EXTEND BELOW GRADE. COORDINATE EXACT LOCATION OF MASONRY CONTROL JOINTS WITH THE ARCHITECT.
7. REFERENCE SECTIONS AND DETAILS FOR SIZE AND LOCATION OF BOND BEAMS AND QUANTITY OF REINFORCING. PROVIDE HORIZONTAL BOND BEAMS IN ALL INTERIOR MASONRY WALLS, 8" HIGH WITH (1) #5 CONT. AT TOP OF WALL. WHERE WALL HEIGHT EXCEEDS +12'–0", PROVIDE AN ADDITIONAL INTERMEDIATE BOND BEAM WITH (1) #5 AT +10'–0" LEVEL. PROVIDE CORNER BARS AT ALL BOND BEAM CORNERS AND INTERSECTIONS TO MATCH HORIZONTAL REINF.
8. REFERENCE ARCHITECTURAL DRAWINGS FOR SIZE AND LOCATION OF ALL OPENINGS IN MASONRY WALLS.

TYPICAL MASONRY WALL REINFORCING DIAGRAM

DETAIL 1 S2.1 NOT TO SCALE

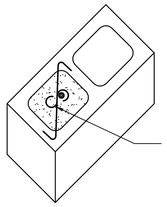

DIAGONAL DESIGN TYPE VERT. REBAR POSITIONER THAT LOCKS INTO CELL OF MASONRY UNITS, SPACED AT 48"o.c. AT EACH REINFORCED CELL (HOT DIPPED GALV.)

TYPICAL REBAR POSITIONER

DETAIL 3 S2.1 NOT TO SCALE

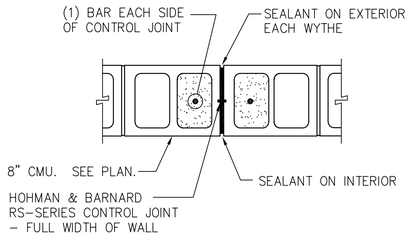

NOTE:
COORDINATE CONTROL JOINT LOCATIONS WITH ARCHITECTURAL DRAWINGS AND WALL LEVEL PLANS

TYPICAL MASONRY CONTROL JOINTS

DETAIL 6 S2.1 NOT TO SCALE

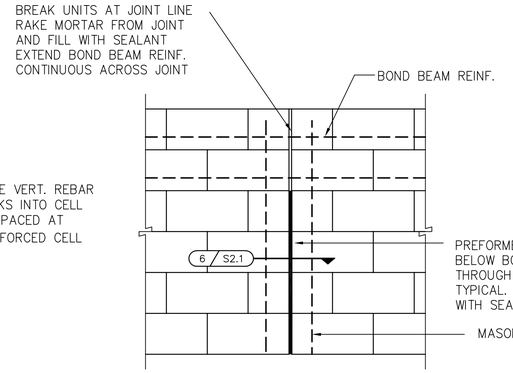

TYPICAL MASONRY CONTROL JOINT ELEVATION AT BOND BEAM

DETAIL 4 S2.1 NOT TO SCALE

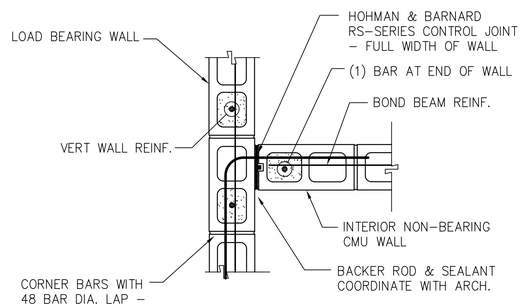

TYPICAL DETAIL @ INTERSECTION BETWEEN INTERIOR NON–BEARING WALL AND LOAD BEARING WALL

DETAIL 7 S2.1 NOT TO SCALE

MASONRY LINTEL SCHEDULE				
WALL THICKNESS	CLEAR SPAN	LINTEL DEPTH	BOTTOM REINFORCING	TOP REINFORCING
8 OR 12	4'–0" MAX.	8"	1–#5	———
8 OR 12	8'–0" MAX	16"	2–#5	———

MASONRY LINTEL NOTES:

1. GROUTED LINTEL BLOCKS IN MASONRY WALLS SHALL EXTEND A MINIMUM OF 16 INCHES BEYOND FACE OF OPENING EACH SIDE. THE FIRST VERTICAL CELL ON EACH SIDE OF THE OPENING SHALL BE GROUTED AND CONTAIN ONE VERTICAL BAR IN EACH CELL CONT. TO THE TOP OF THE WALL UNLESS NOTED OTHERWISE.
2. GROUT FOR LINTELS SHALL BE PLACED IN SINGLE LIFTS AND WITHOUT COLD JOINTS UNLESS OTHERWISE APPROVED BY THE ENGINEER.

MASONRY LINTEL SCHEDULE

DETAIL 2 S2.1 NOT TO SCALE

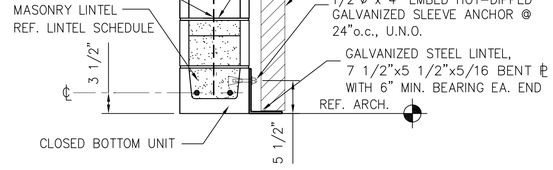

TYPICAL CMU LINTEL SECTION

SECTION 5 S2.1 NOT TO SCALE

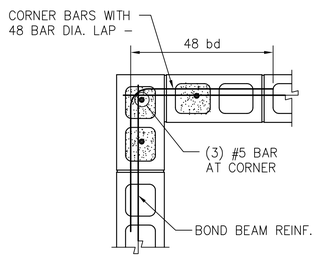

TYPICAL 8" CMU CORNER REINF.

DETAIL 8 S2.1 NOT TO SCALE

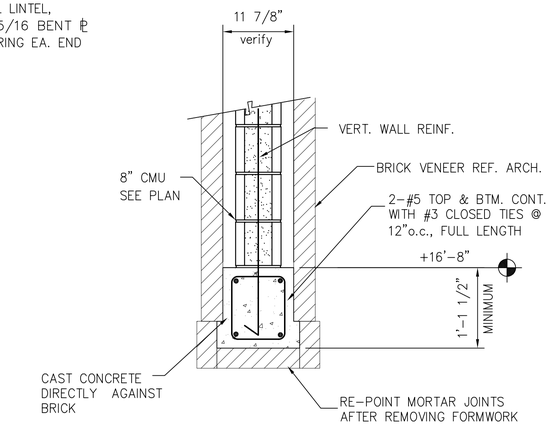

ARCHED BRICK BEAM SECTION

SECTION 9 S2.1 NOT TO SCALE

BARTER & ASSOCIATES, INC.
Structural Engineers
1614 GOVERNMENT ST.
MOBILE, AL 36604-1102
PH. 251-473-8354
FAX 251-473-8356

© Copyright 2022, Barter & Associates, Inc.

WHLC | ARCHITECTURE

ALABAMA LICENSED No. 20131 PROFESSIONAL ENGINEER JAMES A. RUSSELL

06/15/2023

TRANSIT HUB PAVILION

LOXLEY MUNICIPAL PARK
LOXLEY, ALABAMA

washer hill lipscomb cabaniss architecture, llc
copyright 2022
70 south section st fairhope, al
t 251.990.6200

21-205
JUNE 15, 2023
Bid Documents

MASONRY SECTIONS AND DETAILS

S2.1

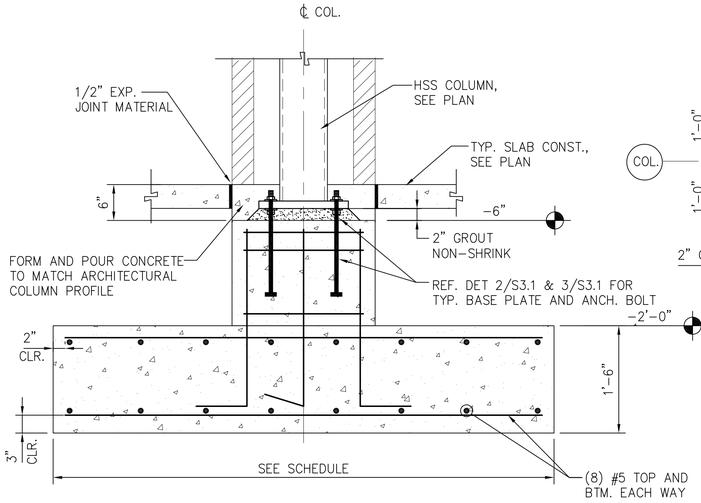

TYPICAL OPEN PAVILION COLUMN BASE

SECTION 1 S3.1
SCALE: 1"=1'-0"

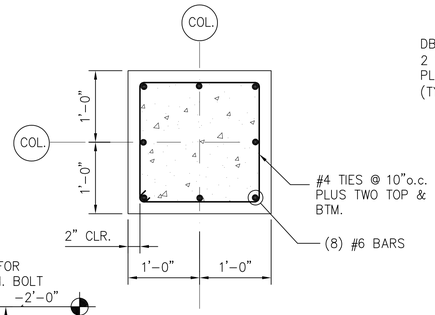

TYPICAL 24X24 COLUMN PEDESTAL

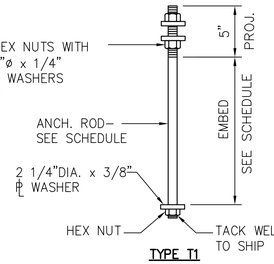

TYPE T1

NOTES:
1. ANCHOR RODS TO MEET ASTM F1554, GRADE 55
2. FINISH IS PLAIN, UNCOATED EXCEPT WHERE COLUMN IS GALVANIZED, THEN USE GALVANIZED ANCHOR RODS

TYPICAL COLUMN ANCHOR BOLTS

DETAIL 2 S3.1
NOT TO SCALE

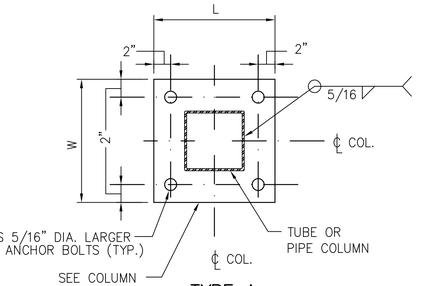

TYPE A

TYPICAL COLUMN ANCHOR BOLTS

DETAIL 3 S3.1
NOT TO SCALE

BARTER & ASSOCIATES, INC.
Structural Engineers
1614 GOVERNMENT ST.
MOBILE, AL 36604-1102
PH. 251-473-8354
FAX 251-473-8356

© Copyright 2022, Barter & Associates, Inc.

WHLC | ARCHITECTURE

ALABAMA LICENSED No. 20131 PROFESSIONAL ENGINEER JAMES A. RUSSELL

06/15/2023

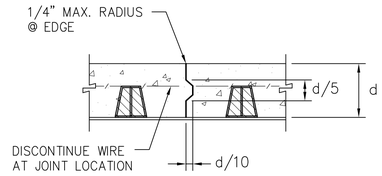

PREFORMED METAL KEYWAY CONSTRUCTION JOINT

SAWED JOINT

TYPICAL SLAB-ON-GRADE JOINTS

SECTION 5 S3.1
NOT TO SCALE

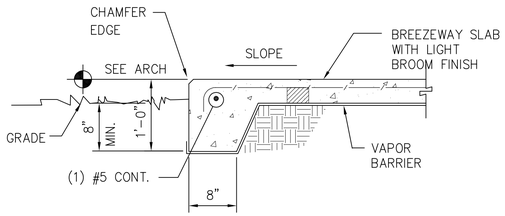

TYPICAL PAVILION AND BREEZEWAY SLAB EDGE

SECTION 6 S3.1
SCALE: 1"=1'-0"

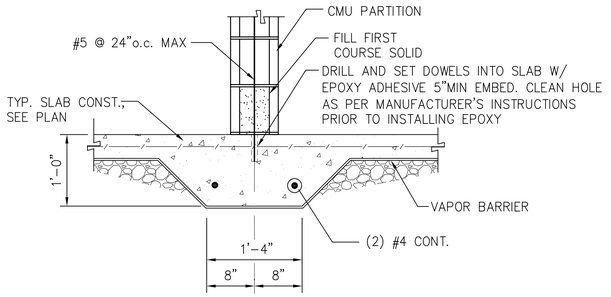

TYPICAL INTERIOR CMU PARTITION SECTION

SECTION 7 S3.1
SCALE: 1"=1'-0"

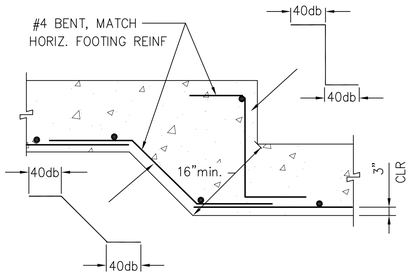

NOTE:
USE WHERE INDICATED ON PLANS AND AS REQUIRED TO MAINTAIN SPECIFIED FOUNDATION COVER BELOW FINISHED GRADE- 12" SOIL COVER MINIMUM

TYPICAL FOOTING STEP

DETAIL 4 S3.1
NOT TO SCALE

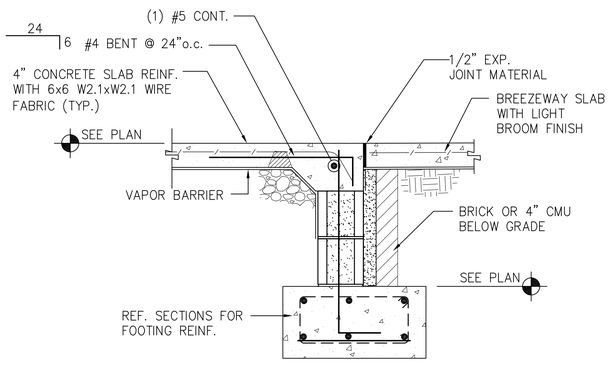

TYPICAL SECTION AT DOORWAY

SECTION 8 S3.1
SCALE: 1"=1'-0"

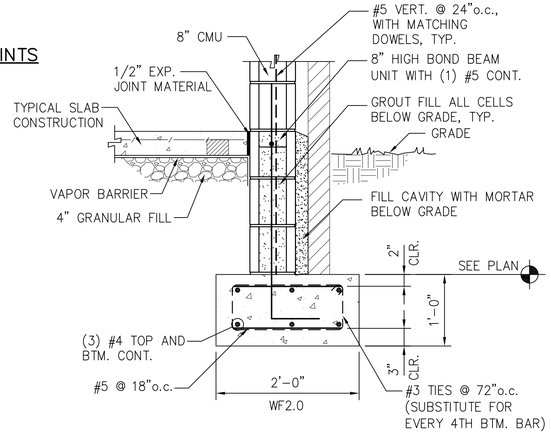

TYPICAL EXTERIOR WALL SECTION (FLOATING SLAB)

SECTION 9 S3.1
SCALE: 1"=1'-0"

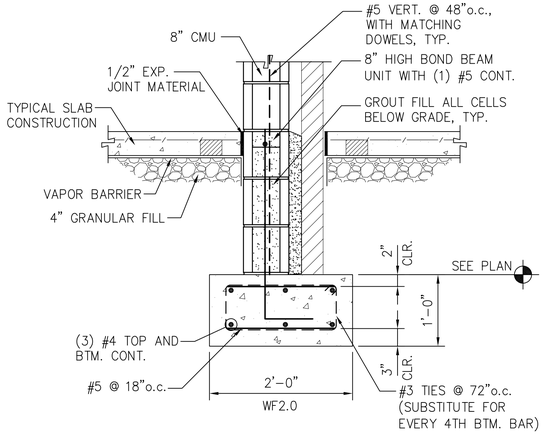

TYPICAL INTERIOR WALL SECTION (FLOATING SLAB)

SECTION 10 S3.1
SCALE: 1"=1'-0"

TRANSIT HUB PAVILION

LOXLEY MUNICIPAL PARK
LOXLEY, ALABAMA

washer hill lipscomb cabaniss architecture, llc

copyright 2022

70 south section st fairhope, al
t 251.990.6200

21-205
JUNE 15, 2023
Bid Documents

FOUNDATION SECTIONS AND DETAILS

S3.1

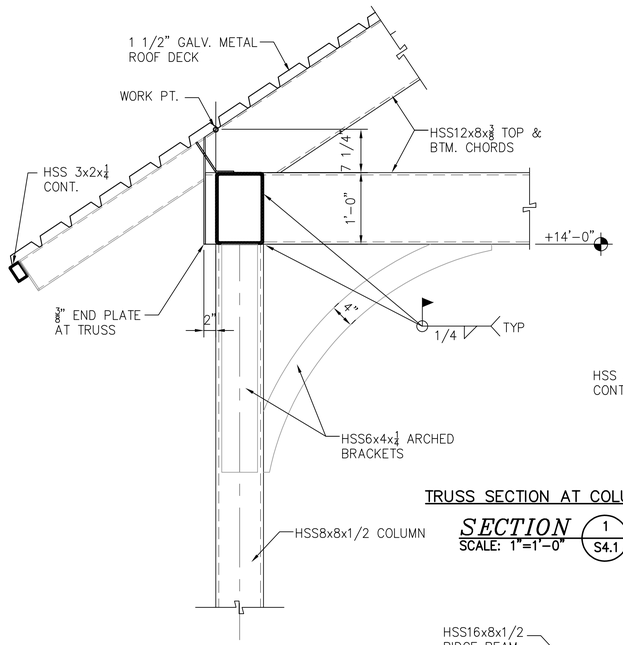

TRUSS SECTION AT COLUMN

SECTION 1 S4.1
SCALE: 1"=1'-0"

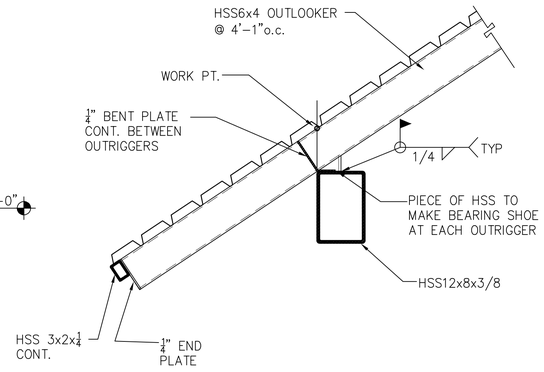

OUTRIGGER SECTION AT EAVE

SECTION 2 S4.1
SCALE: 1"=1'-0"

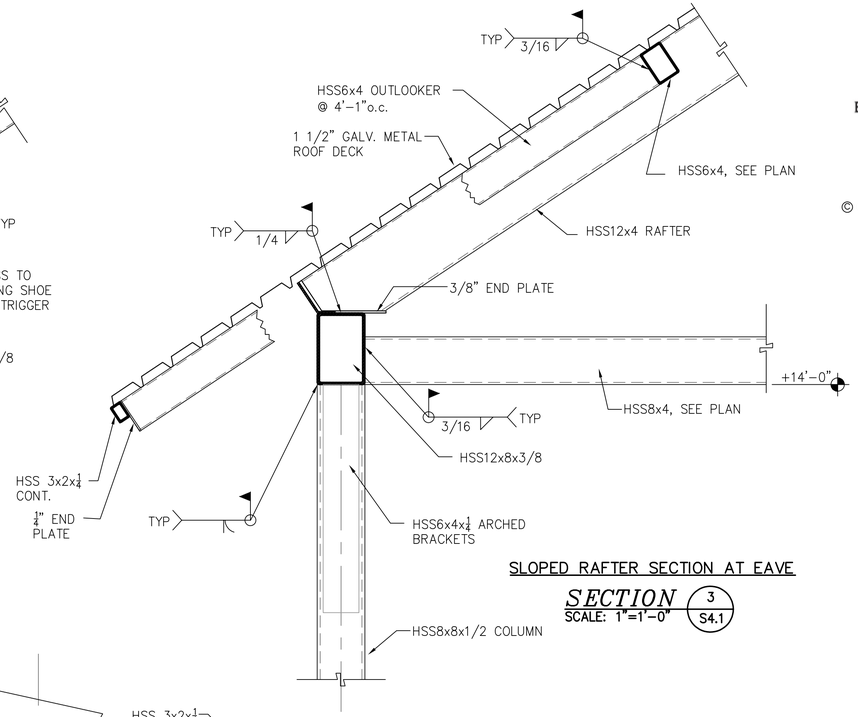

SLOPED RAFTER SECTION AT EAVE

SECTION 3 S4.1
SCALE: 1"=1'-0"

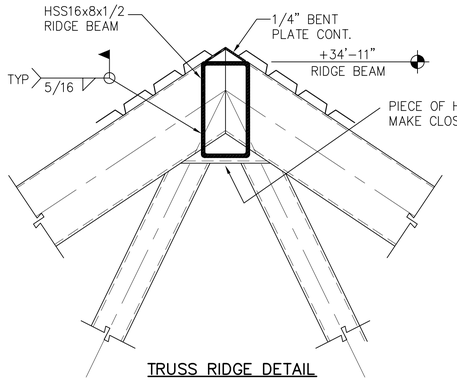

TRUSS RIDGE DETAIL

SECTION 5 S4.1
SCALE: 1"=1'-0"

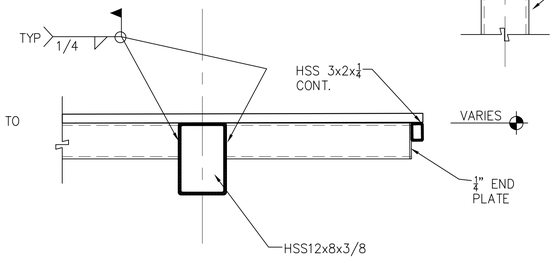

ENDWALL OVERHANG DETAIL

SECTION 7 S4.1
SCALE: 1"=1'-0"

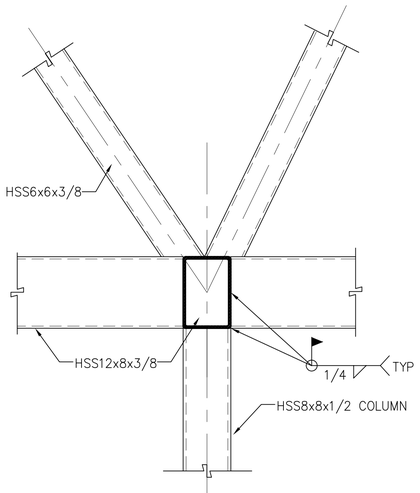

TRUSS DETAIL AT INTERIOR COLUMN

SECTION 4 S4.1
SCALE: 1"=1'-0"

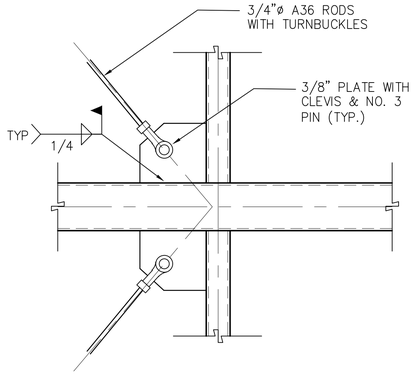

TYPICAL ROD END CONNECTION

DETAIL 6 S4.1
SCALE: 1"=1'-0"

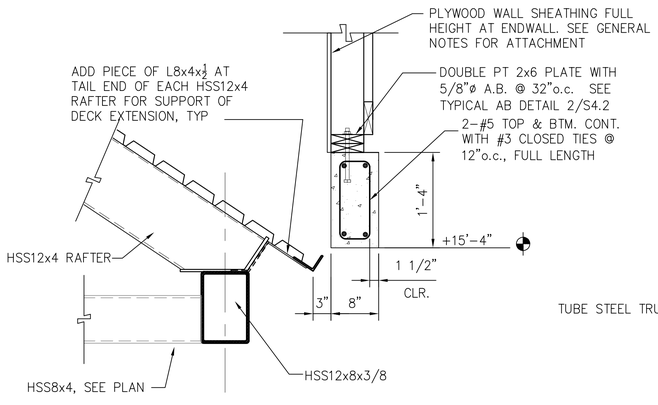

CONCRETE LINTEL CL-2

SECTION 8 S4.1
SCALE: 1"=1'-0"

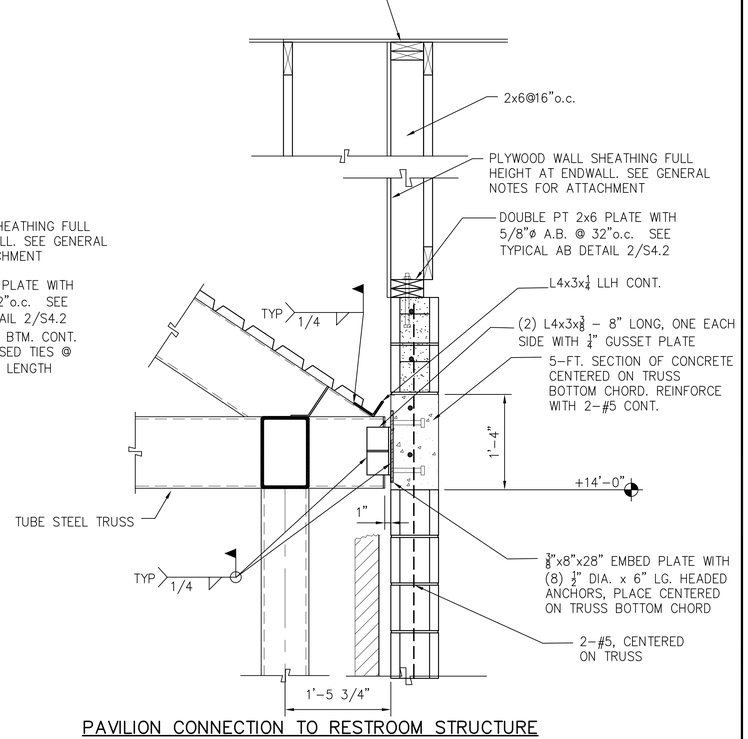

PAVILION CONNECTION TO RESTROOM STRUCTURE

SECTION 9 S4.1
SCALE: 1"=1'-0"

BARTER & ASSOCIATES, INC.
Structural Engineers
1614 GOVERNMENT ST.
MOBILE, AL 36604-1102
PH. 251-473-8354
FAX 251-473-8356

© Copyright 2022, Barter & Associates, Inc.

WHLC | ARCHITECTURE

ALABAMA LICENSED No. 20131 PROFESSIONAL ENGINEER JAMES A. RUSSELL

06/15/2023

TRANSIT HUB PAVILION

LOXLEY MUNICIPAL PARK
LOXLEY, ALABAMA

washer hill lipscomb cabaniss architecture, llc
copyright 2022
70 south section st fairhope, al
t 251.990.6200

21-205
JUNE 15, 2023
Bid Documents

ROOF FRAMING SECTIONS AND DETAILS

S4.1

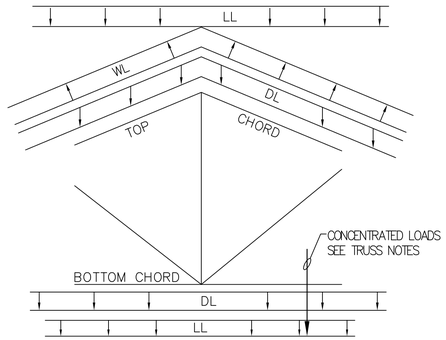

TYPICAL ROOF TRUSS LOAD DIAGRAM

NOTE: THIS DIAGRAM IS A SCHEMATIC SHOWING THE APPLICATION OF LOADS STATED HEREIN. LOADS SHALL BE COMBINED AS PROVIDED BY THE GOVERNING BUILDING CODE TO DETERMINE THE MOST UNFAVORABLE EFFECT.

PREFABRICATED ROOF TRUSS DESIGN CRITERIA:

DL = 10 PSF TOP CHORD
LL = 20 PSF TOP CHORD
WL = 155 MPH EXPOSURE "C" PER ASCE 7-10
ENCLOSED BUILDING
DL = 10 PSF BOTTOM CHORD

DETAIL NOT TO SCALE 1/S4.2

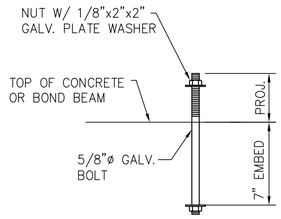

NOTE:
STAGGER SPLICES IN DOUBLE TOP PLATE AT LEAST 36-INCHES OR PROVIDE ADDITIONAL ANCHOR BOLTS WITHIN 12" OF EACH END OF SILL PLATE.

TYPICAL ANCHOR BOLT DETAIL FOR SILL PLATE ANCHORAGE

DETAIL NOT TO SCALE 2/S4.2

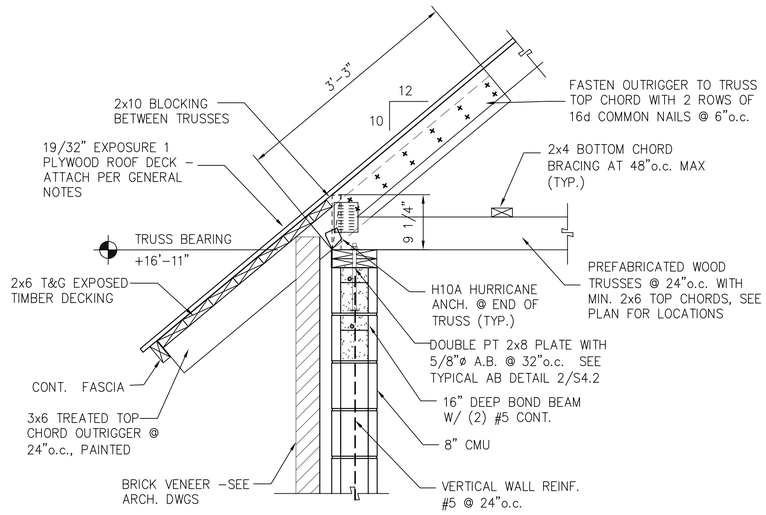

TYPICAL ROOF TRUSS AT EXTERIOR WALL

SECTION SCALE: 1"=1'-0" 3/S4.2

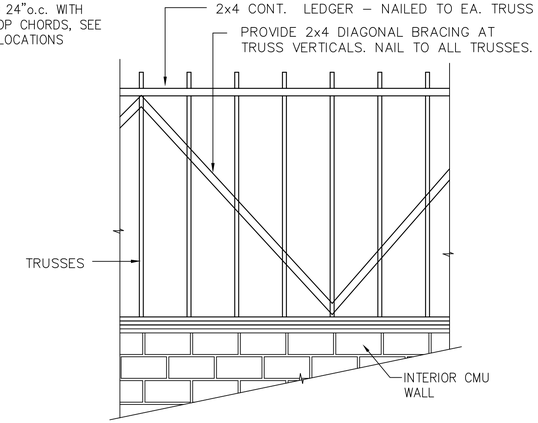

TYPICAL ROOF TRUSS BRACING AT INTERIOR CMU WALL

DETAIL NOT TO SCALE 4/S4.2

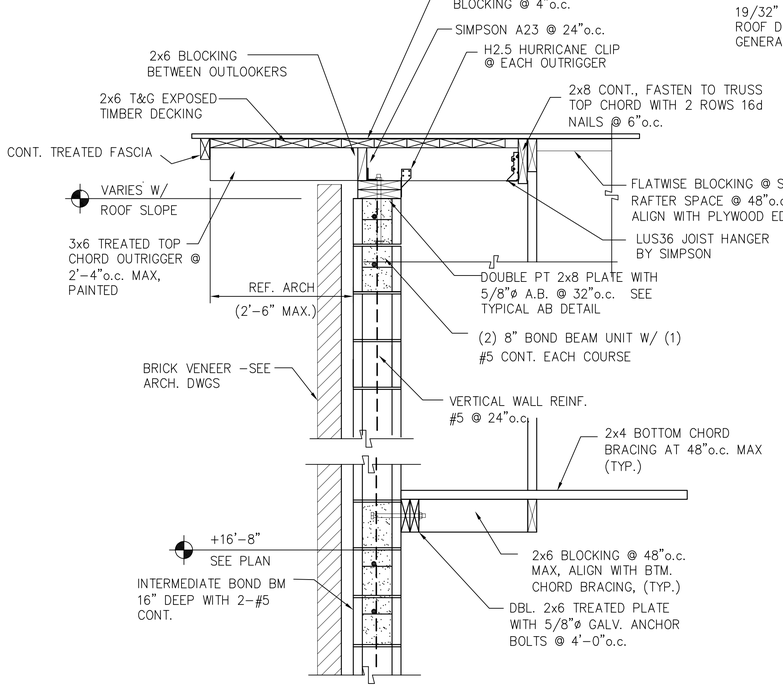

TYPICAL EXTERIOR GABLE ENDWALL SECTION

SECTION SCALE: 1"=1'-0" 5/S4.2

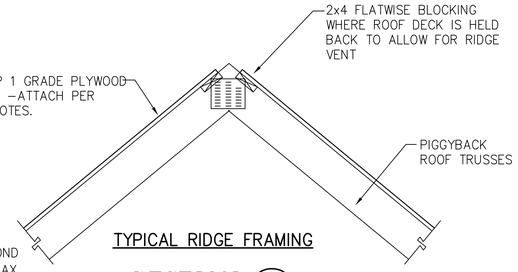

TYPICAL RIDGE FRAMING

SECTION NOT TO SCALE 6/S4.2

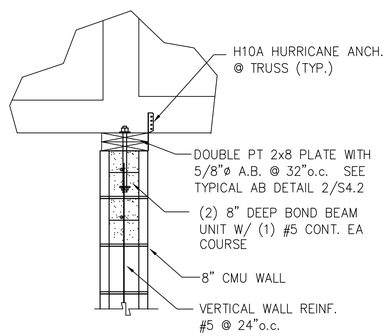

TYPICAL TRUSS CONNECTION TO BREEZEWAY CMU WALL

SECTION SCALE: 1"=1'-0" 7/S4.2

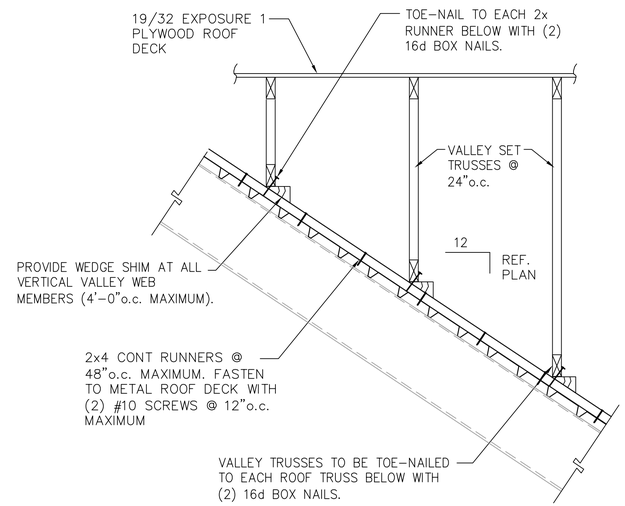

TYPICAL VALLEY SET CONSTRUCTION

SECTION SCALE: 1"=1'-0" 8/S4.2

BARTER & ASSOCIATES, INC.
Structural Engineers
1614 GOVERNMENT ST.
MOBILE, AL 36604-1102
PH. 251-473-8354
FAX 251-473-8356

© Copyright 2022, Barter & Associates, Inc.

WHLC | ARCHITECTURE

ALABAMA LICENSED No. 20131 PROFESSIONAL ENGINEER JAMES A. RUSSELL

06/15/2023

TRANSIT HUB PAVILION

LOXLEY MUNICIPAL PARK
LOXLEY, ALABAMA

washer hill lipscomb cabaniss architecture, llc
copyright 2022

70 south section st fairhope, al
t 251.990.6200

21-205
JUNE 15, 2023
Bid Documents

ROOF FRAMING SECTIONS AND DETAILS

S4.2

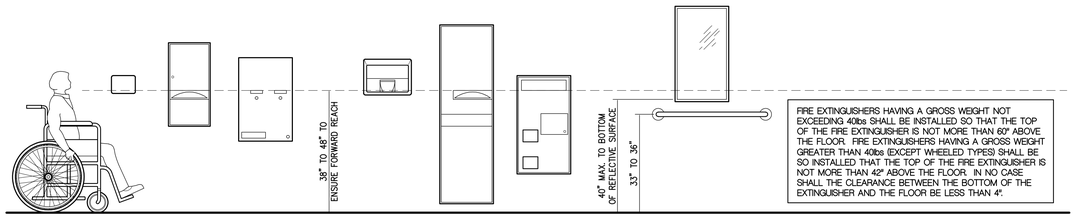

1 MOUNTING HEIGHTS
SCALE: 1/2"=1'-0"

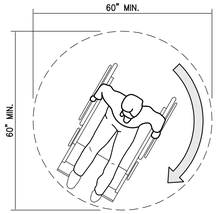

2 180° TURNING RADIUS
SCALE: 1/2"=1'-0"

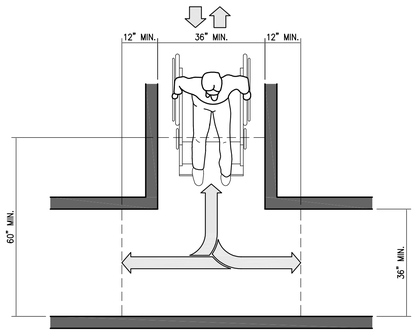

3 T-SHAPED TURNING SPACE
SCALE: 1/2"=1'-0"

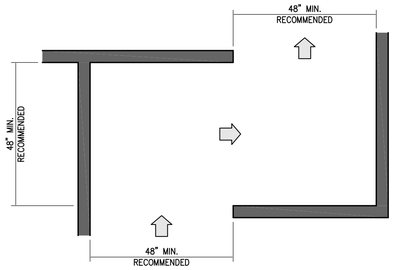

4 OPEN VESTIBULE
SCALE: 1/2"=1'-0"

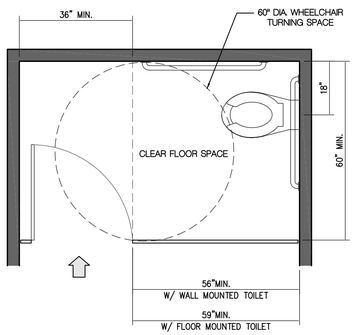

5 STANDARD ALCOVE WHEELCHAIR ACCESSIBLE COMPARTMENT
SCALE: 1/2"=1'-0"

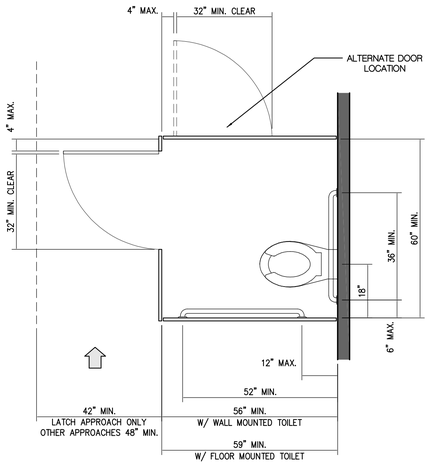

6 STANDARD WHEELCHAIR ACCESSIBLE COMPARTMENT
SCALE: 1/2"=1'-0"

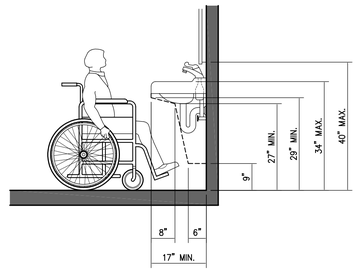

7 KNEE AND TOE CLEARANCE AT LAVATORY
SCALE: 1/2"=1'-0"

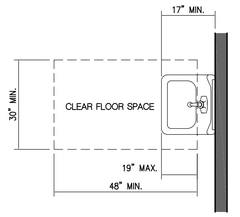

8 CLEAR FLOOR SPACE AT LAVATORY
SCALE: 1/2"=1'-0"

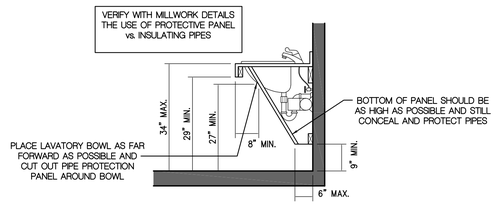

9 PROTECTIVE PANEL UNDER LAVATORY
SCALE: 1/2"=1'-0"

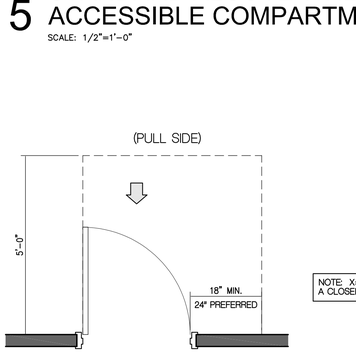

10 SWINGING DOOR FRONT APPROACH
SCALE: 1/2"=1'-0"

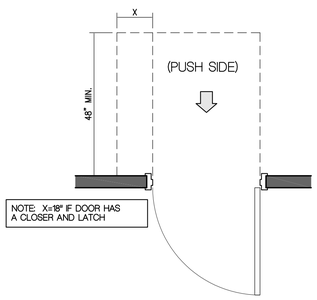

11 SWINGING DOOR FRONT APPROACH
SCALE: 1/2"=1'-0"

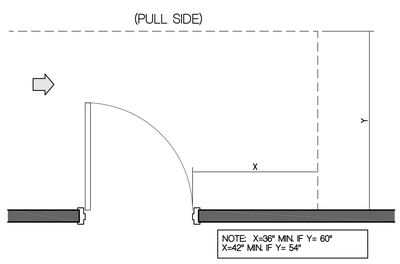

12 SWINGING DOOR HINGE SIDE APPROACH
SCALE: 1/2"=1'-0"

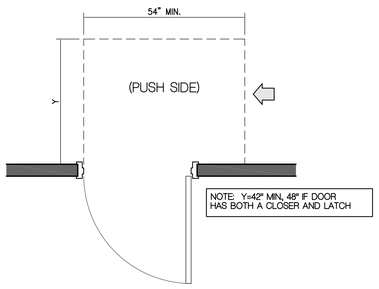

13 SWINGING DOOR HINGE SIDE APPROACH
SCALE: 1/2"=1'-0"

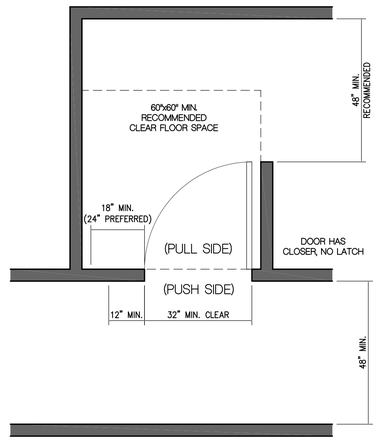

14 SINGLE DOOR
SCALE: 1/2"=1'-0"

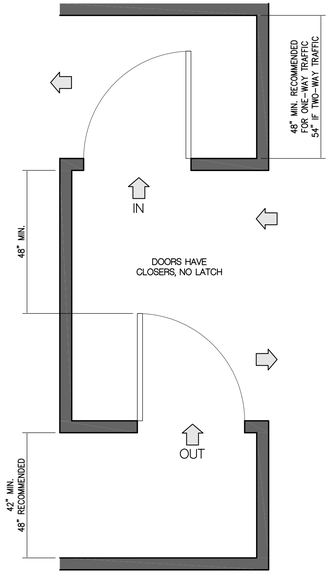

15 OPPOSING DOORS
SCALE: 1/2"=1'-0"

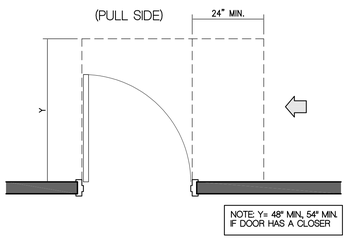

16 SWINGING DOOR LATCH SIDE APPROACH
SCALE: 1/2"=1'-0"

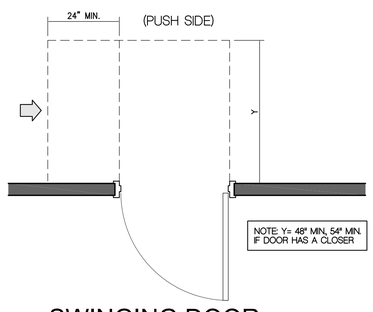

17 SWINGING DOOR LATCH SIDE APPROACH
SCALE: 1/2"=1'-0"

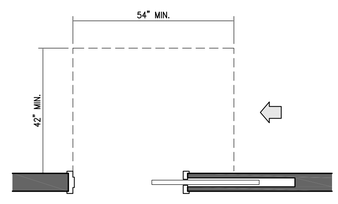

18 SLIDING & FOLDING DOORS SLIDE SIDE APPROACH
SCALE: 1/2"=1'-0"

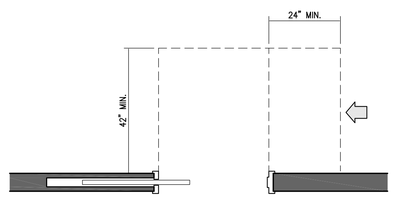

19 SLIDING & FOLDING DOORS LATCH SIDE APPROACH
SCALE: 1/2"=1'-0"

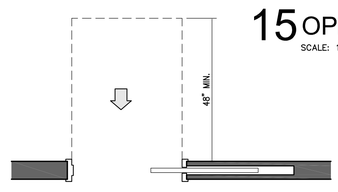

20 SLIDING & FOLDING DOORS FRONT APPROACH
SCALE: 1/2"=1'-0"

NOTE:
ANY DEVIATIONS FOUND IN THE CONTRACT DOCUMENTS FROM THESE STANDARDS SHALL BE BROUGHT TO THE ARCHITECTS ATTENTION PRIOR TO COMMENCING CONSTRUCTION.

WHLC | ARCHITECTURE

TRANSIT HUB PAVILION

LOXLEY MUNICIPAL PARK
LOXLEY, ALABAMA

washer hill lipscomb cabaniss architecture, llc
copyright 2022
70 south section st fairhope, al
t 251.990.6200

21-205
JUNE 12TH, 2022
BID DOCUMENTS 100%

ADA

ADA

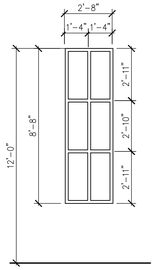

A

EXTERIOR IMPACT RATED STOREFRONT SYSTEM. COLOR TO BE SELECTED

5 WINDOW SCHEDULE

SCALE: 1/4"=1'-0"

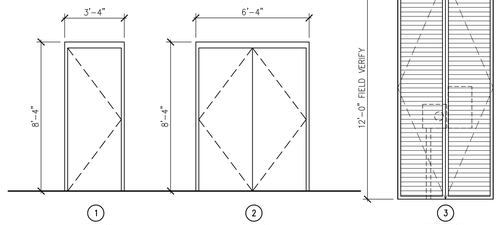

1

EXTERIOR GALVANIZED HOLLOW METAL W/METAL FRAME PAINTED AUTOMATIC CLOSER

2

EXTERIOR PAIR GALVANIZED HOLLOW METAL W/METAL FRAME PAINTED AUTOMATIC CLOSER

4 DOOR SCHEDULE

SCALE: 1/4"=1'-0"

3

EXTERIOR PREFINISHED OPERABLE LOUVERED DOOR SYSTEM IN ALUMINUM FRAME SYSTEM W/CONTINUOUS HINGES. PROVIDE LOCK MECHANISM. COLOR TO BE SELECTED FROM MANUFACTURES STANDARD COLORS PROVIDE INSECT SCREEN ON INSIDE FACE

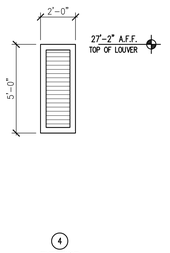

4

EXTERIOR PREFINISHED LOUVER SYSTEM. COLOR TO BE SELECTED FROM MANUFACTURES STANDARD COLORS PROVIDE INSECT SCREEN ON INSIDE FACE

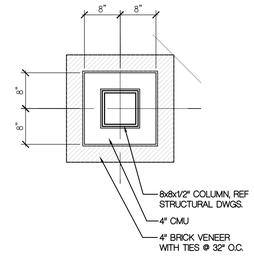

3 ENLARGED COLUMN DETAIL

SCALE: 3/4"=1'-0"

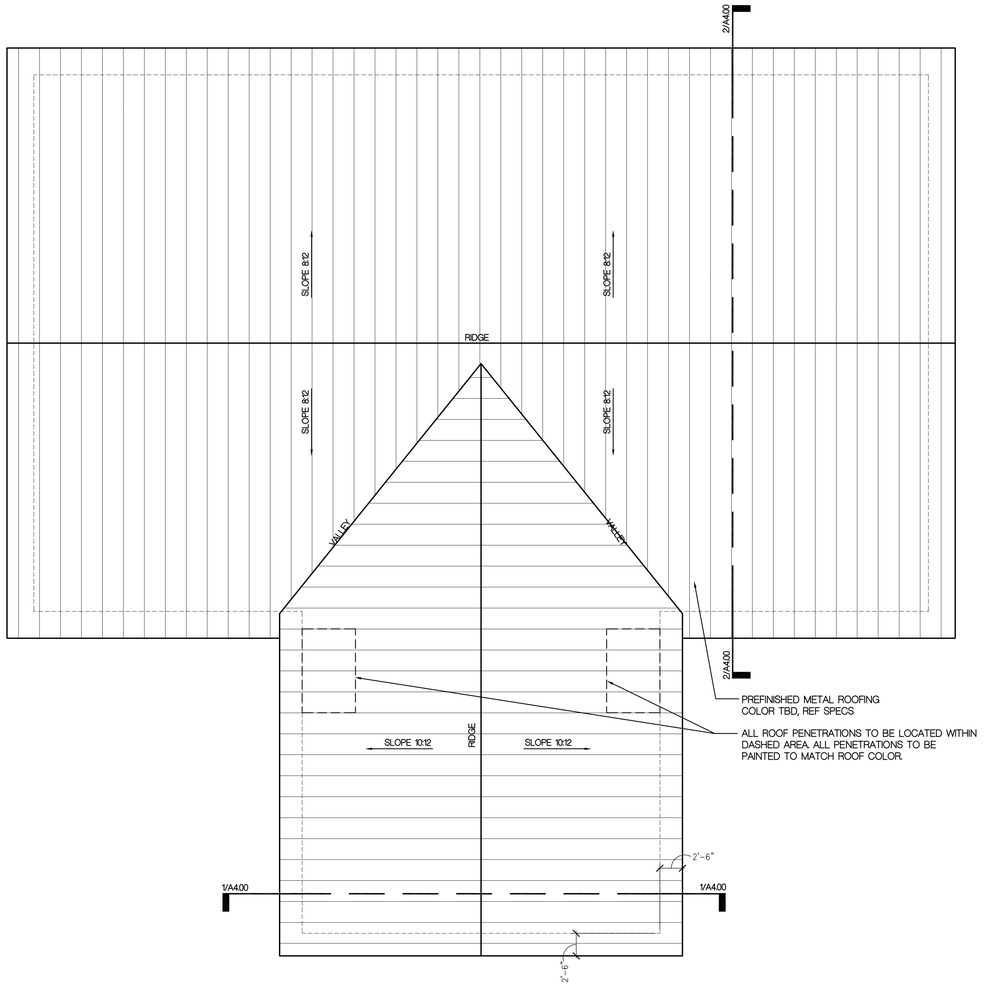

1 ROOF PLAN

SCALE: 1/8"=1'-0"

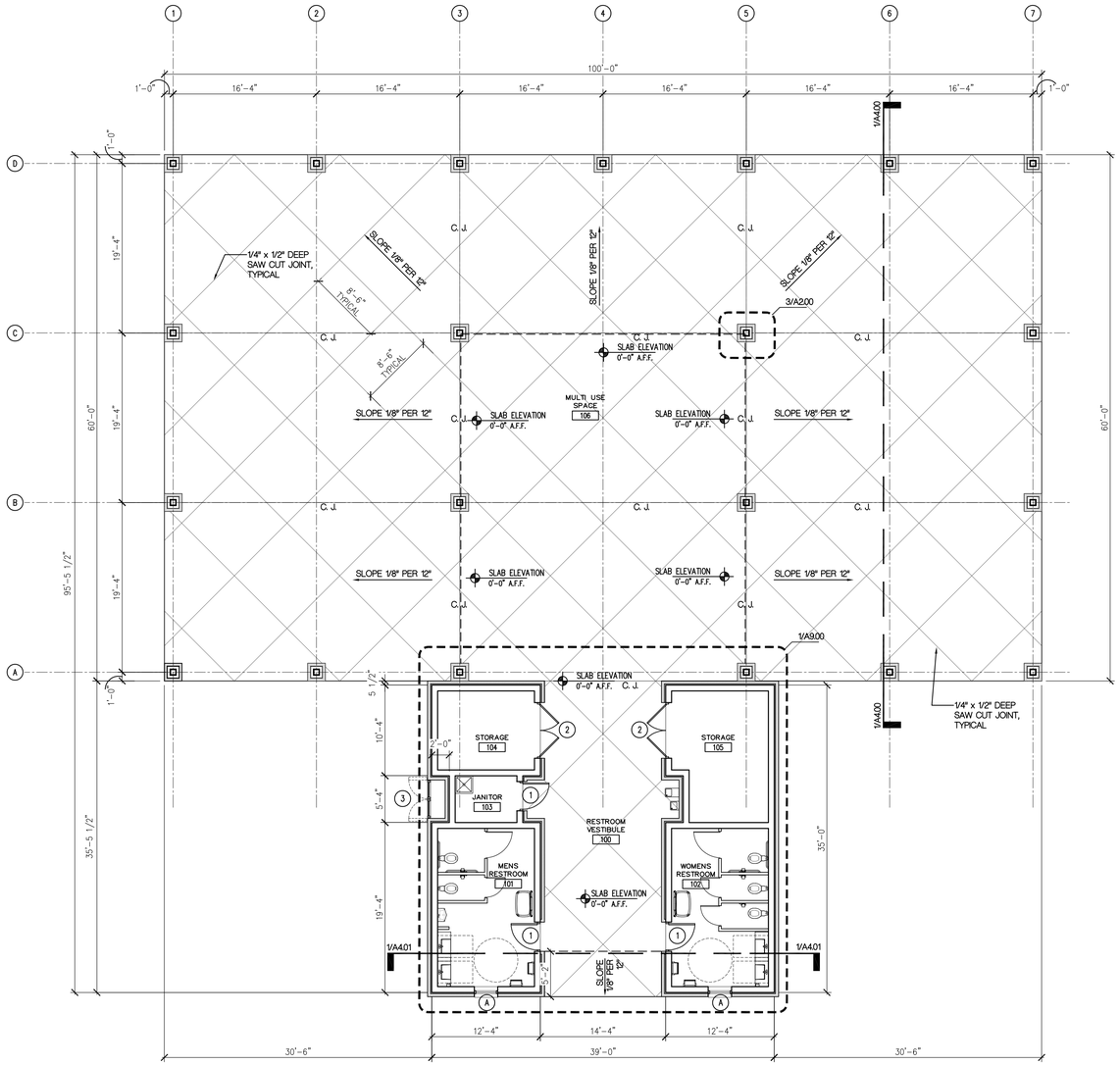

2 FLOOR PLAN

SCALE: 1/8"=1'-0"

WHLC | ARCHITECTURE

TRANSIT HUB PAVILION

LOXLEY MUNICIPAL PARK
LOXLEY, ALABAMA

washer hill lipscomb cabaniss architecture, llc
copyright 2022

70 south section st fairhope, al
t 251.990.6200

21-205
AUG 7TH, 2023
BID DOCUMENTS 100%

FLOOR PLAN
ROOF PLAN

A2.00

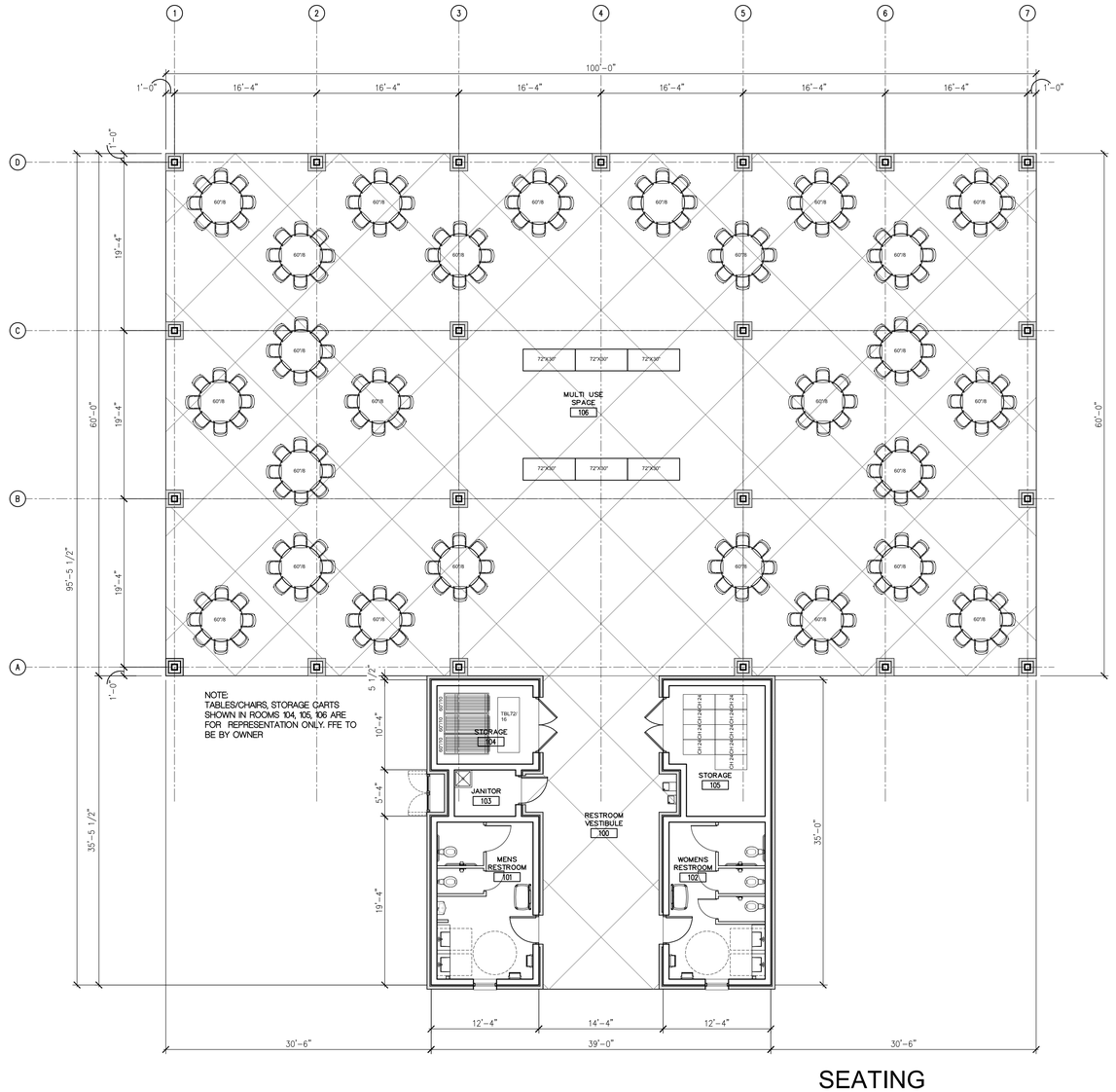

1 SEATING FLOOR PLAN

SCALE: 1/8"=1'-0"

WHLC | ARCHITECTURE

TRANSIT HUB PAVILION

LOXLEY MUNICIPAL PARK
LOXLEY, ALABAMA

washer hill lipscomb cabaniss architecture, llc

copyright 2022

70 south section st fairhope, al
t 251.990.6200

21-205
AUG 7TH, 2023
BID DOCUMENTS 100%

SEATING FLOOR PLAN

A2.01

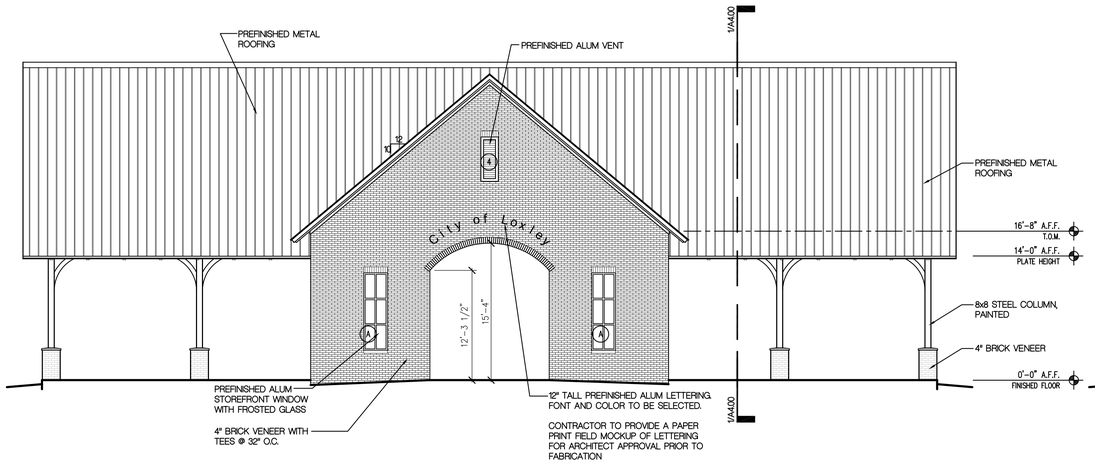

1 FRONT ELEVATION

SCALE: 1/8"=1'-0"

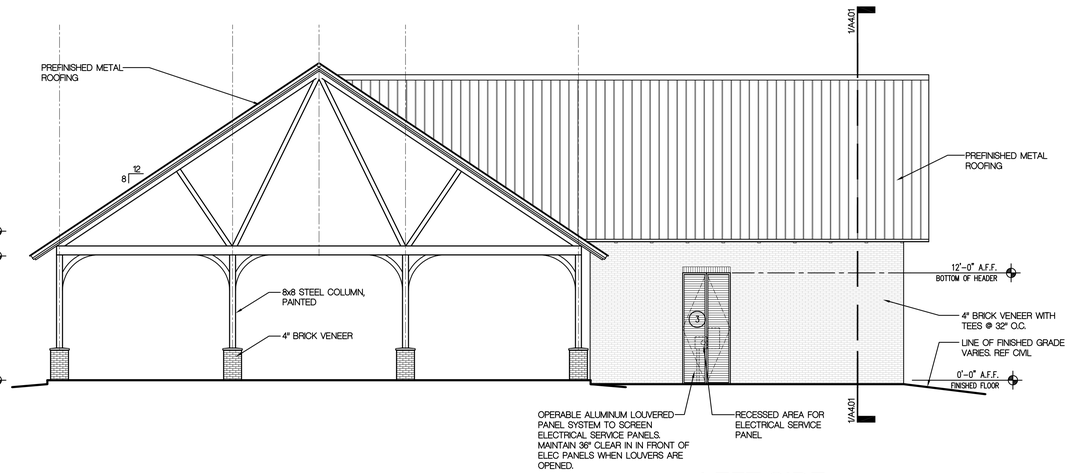

2 LEFT SIDE ELEVATION

SCALE: 1/8"=1'-0"

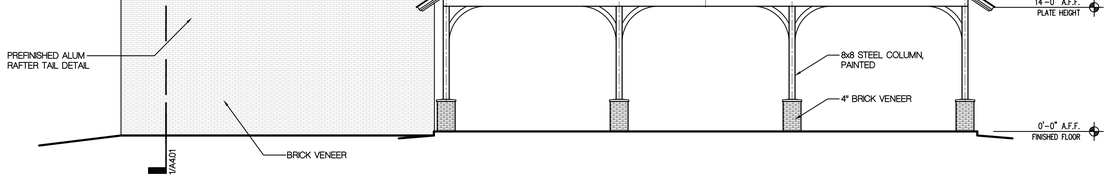

3 RIGHT SIDE ELEVATION

SCALE: 1/8"=1'-0"

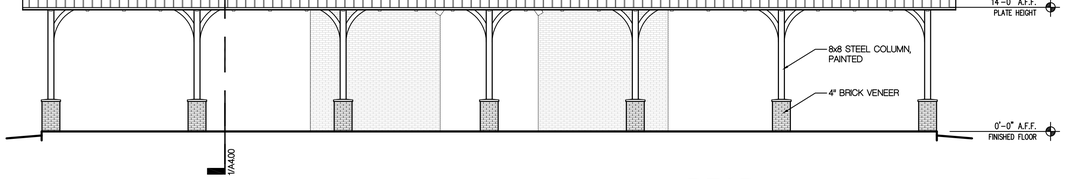

4 REAR ELEVATION

SCALE: 1/8"=1'-0"

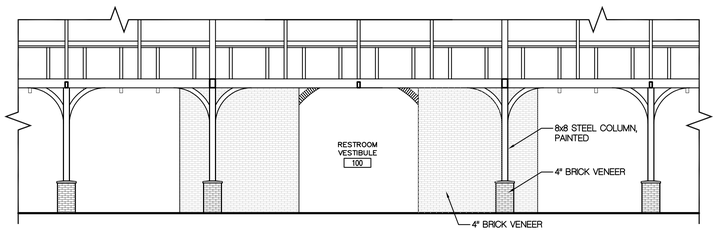

7 INTERIOR ELEVATION

SCALE: 1/8"=1'-0"

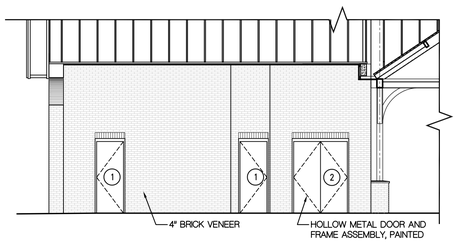

6 VESTIBULE ELEVATION

SCALE: 1/8"=1'-0"

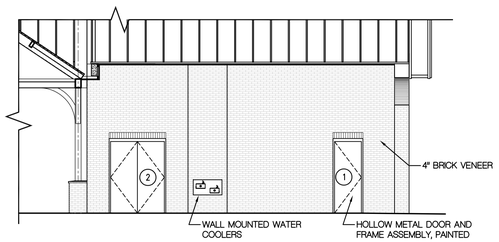

5 VESTIBULE ELEVATION

SCALE: 1/8"=1'-0"

WHLC | ARCHITECTURE

TRANSIT HUB PAVILION

LOXLEY MUNICIPAL PARK

LOXLEY, ALABAMA

washer hill lipscomb cabaniss architecture, llc

copyright 2022

70 south section st fairhope, al
t 251.990.6200

21-205

AUG 7TH, 2023

BID DOCUMENTS 100%

EXTERIOR ELEVATIONS

A3.00

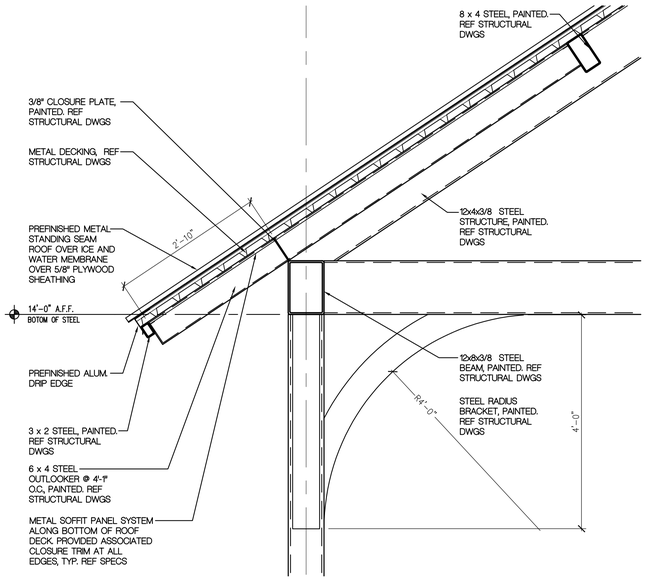

2 SECTION DETAIL

SCALE: 3/4"=1'-0"

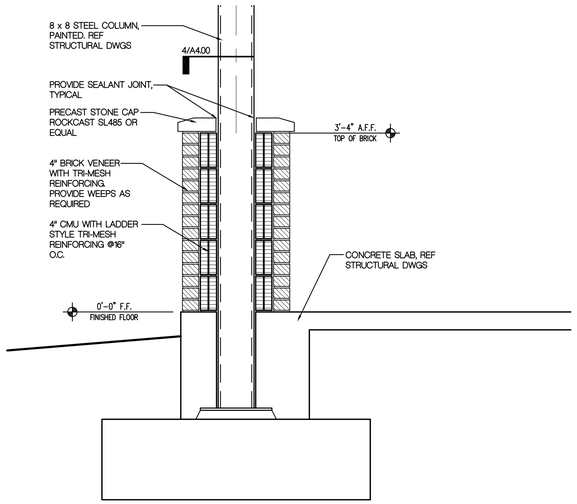

3 SECTION DETAIL

SCALE: 3/4"=1'-0"

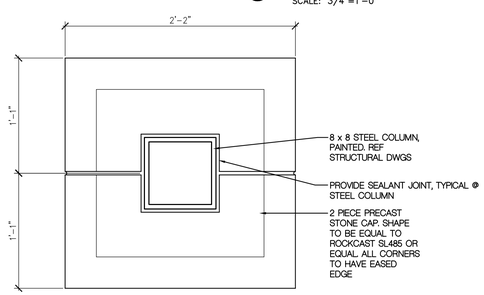

4 COLUMN BASE CAP PLAN VIEW

SCALE: 1-1/2"=1'-0"

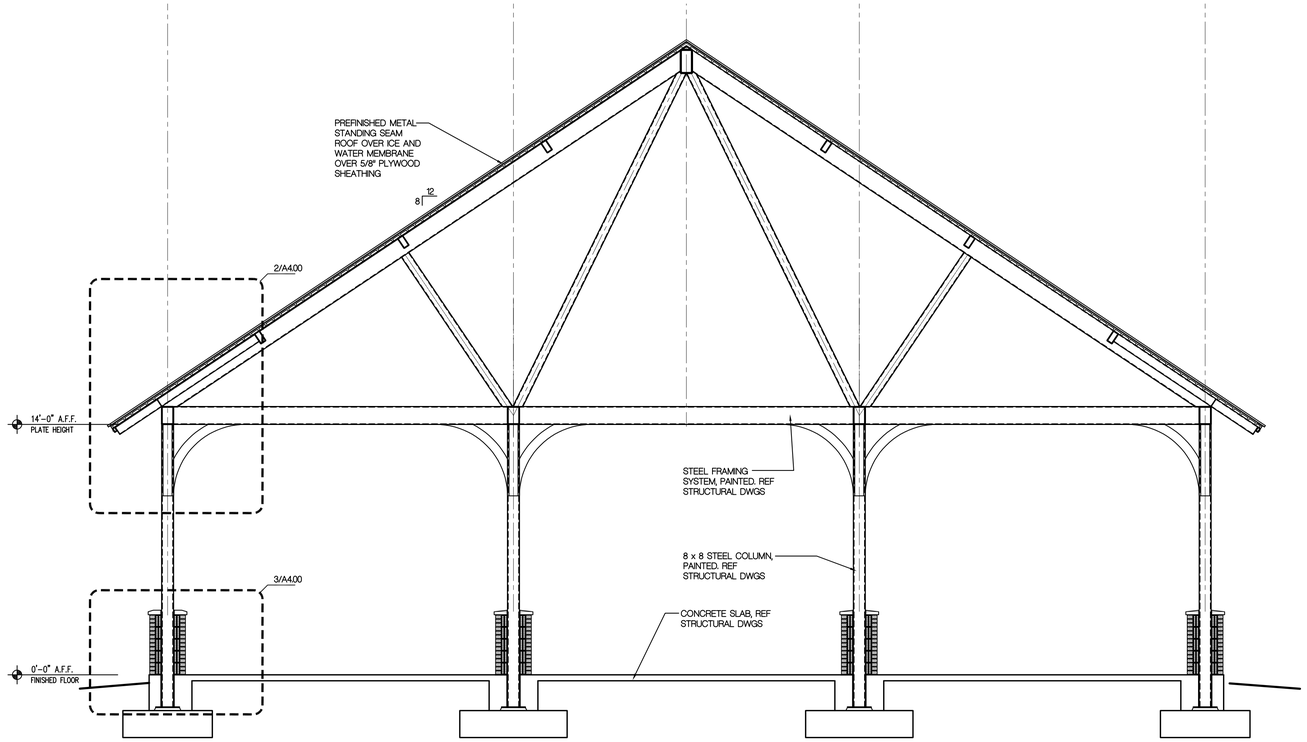

1 BUILDING SECTION

SCALE: 1/4"=1'-0"

WHLC | ARCHITECTURE

TRANSIT HUB PAVILION

LOXLEY MUNICIPAL PARK
LOXLEY, ALABAMA

washer hill lipscomb cabaniss architecture, llc
copyright 2022

70 south section st fairhope, al
t 251.990.6200

21-205
AUG 7TH, 2023
BID DOCUMENTS 100%

BUILDING SECTIONS

A4.00

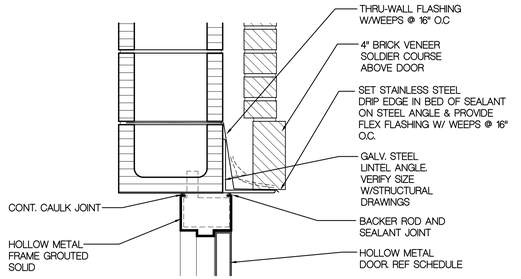

3 HEAD DETAIL

SCALE: 1-1/2"=1'-0"

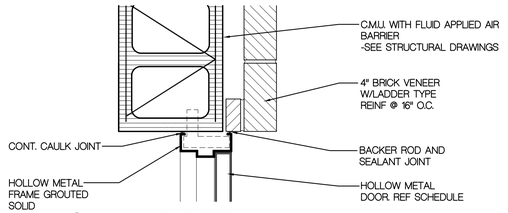

4 JAMB DETAIL

SCALE: 1-1/2"=1'-0"

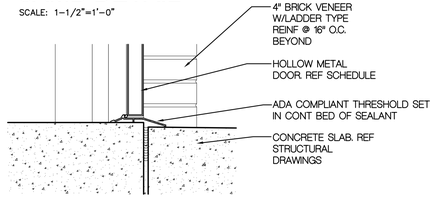

5 SILL DETAIL

SCALE: 1-1/2"=1'-0"

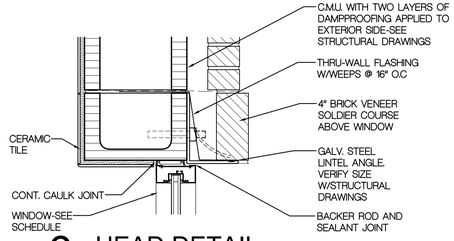

6 HEAD DETAIL

SCALE: 1-1/2"=1'-0"

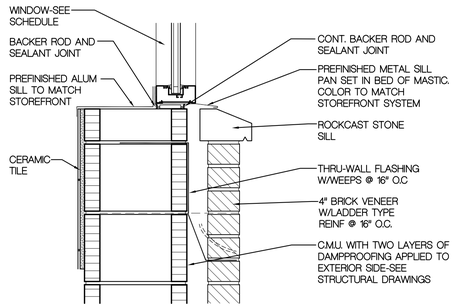

7 SILL DETAIL

SCALE: 1-1/2"=1'-0"

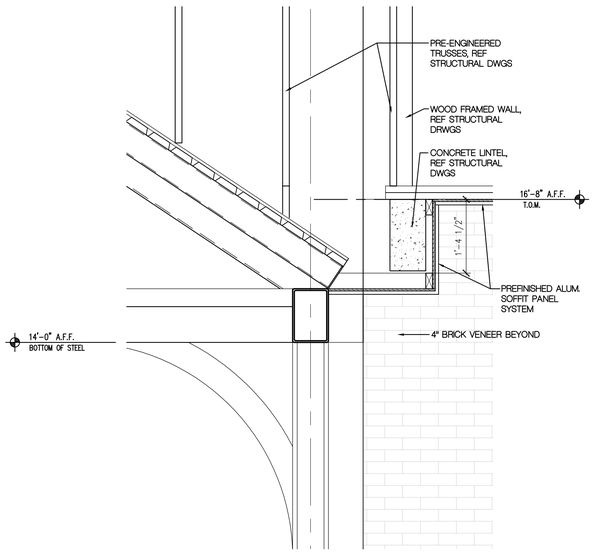

8 SECTION DETAIL

SCALE: 3/4"=1'-0"

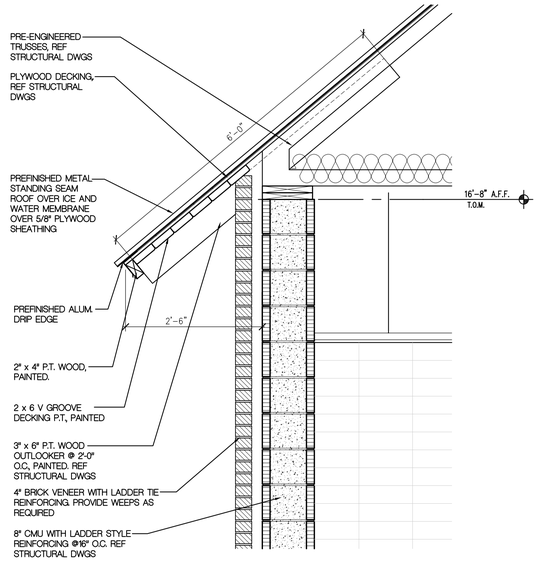

2 SECTION DETAIL

SCALE: 3/4"=1'-0"

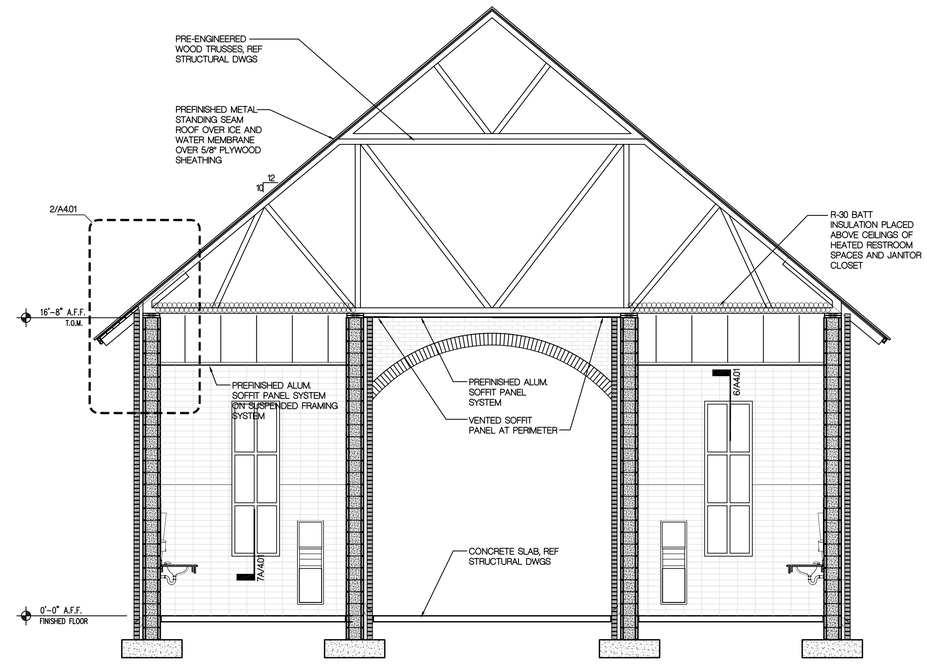

1 BUILDING SECTION

SCALE: 1/4"=1'-0"

WHLC | ARCHITECTURE

TRANSIT HUB PAVILION

LOXLEY MUNICIPAL PARK
LOXLEY, ALABAMA

washer hill lipscomb cabaniss architecture, llc
copyright 2022

70 south section st fairhope, al
t 251.990.6200

21-205
AUG 7TH, 2023
BID DOCUMENTS 100%

BUILDING SECTIONS

A4.01

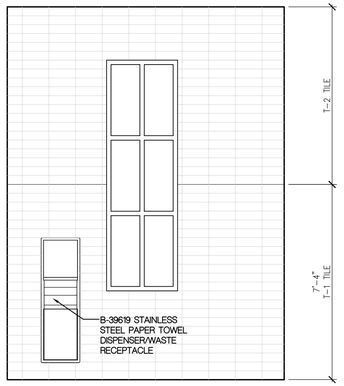

5 MENS RESTROOM INTERIOR ELEVATION
SCALE: 3/8"=1'-0"

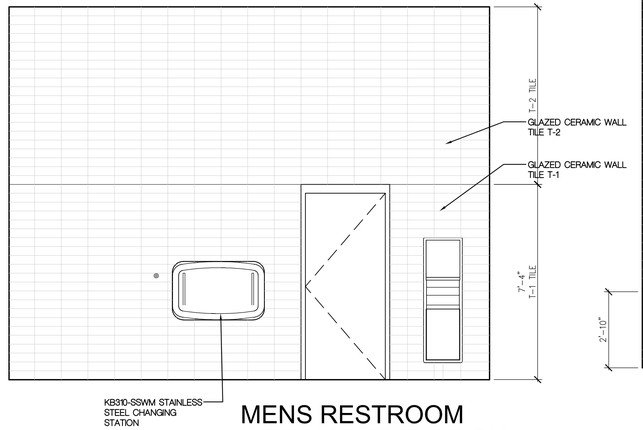

4 MENS RESTROOM INTERIOR ELEVATION
SCALE: 3/8"=1'-0"

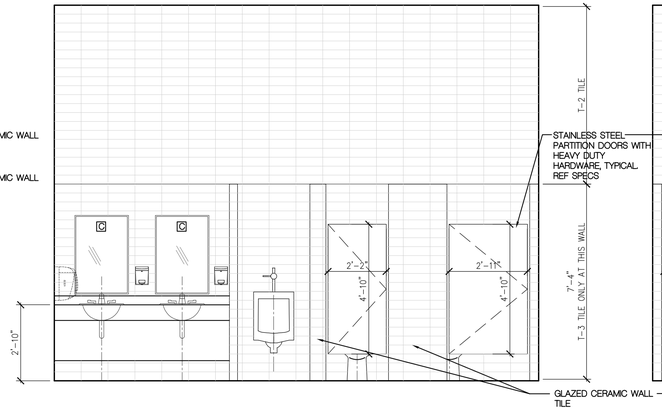

3 MENS RESTROOM INTERIOR ELEVATION
SCALE: 3/8"=1'-0"

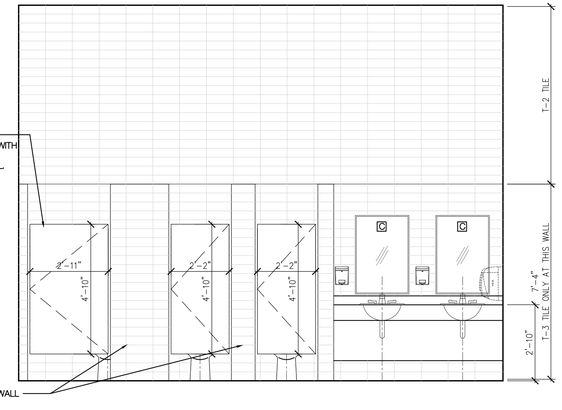

2 WOMENS RESTROOM INTERIOR ELEVATION
SCALE: 3/8"=1'-0"

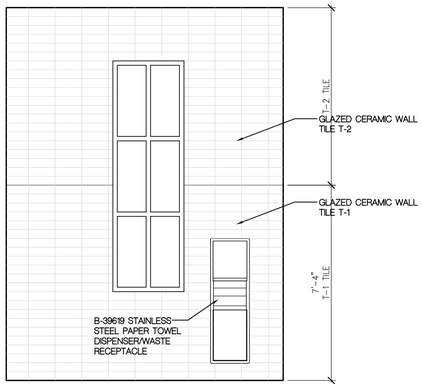

6 WOMENS RESTROOM INTERIOR ELEVATION
SCALE: 3/8"=1'-0"

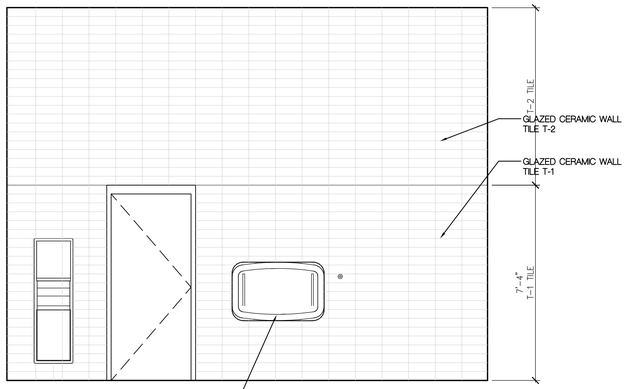

7 WOMENS RESTROOM INTERIOR ELEVATION
SCALE: 3/8"=1'-0"

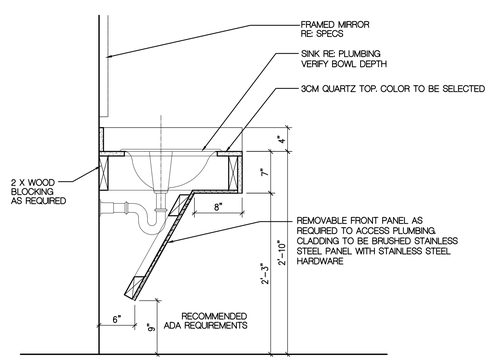

8 BATH COUNTER W/ SINK
SCALE: 1"=1'-0"

BATHROOM ACCESSORIES

TYPE	MNFCTR/SERIES	MODEL#	FINISH	DESCRIPTION
A	BOBRICK	B-2740	ALUMINUM	SURFACE MOUNT DOUBLE ROLL TISSUE DISPENSER
B	BOBRICK	B-39619	STAINLESS STEEL	RECESSED PAPER TOWEL DISPENSER AND WASTE RECEPTACLE
C	BOBRICK	B-293-1830	STAINLESS STEEL	SURFACE MOUNTED TILT MIRROR - 18"X30"
D			STAINLESS STEEL	36" - CONCEALED MOUNTING W/SNAP FLANGE - SATIN FINISH - 1 1/2" DIA GRAB BAR
E			STAINLESS STEEL	42" - CONCEALED MOUNTING W/SNAP FLANGE - SATIN FINISH - 1 1/2" DIA GRAB BAR
F	TRUBRO	LAVGUARD2	WHITE	ADA COMPLIANT PIPE COVER
G	BOBRICK	B-9542	STAINLESS STEEL	SURFACE MOUNTED COAT HOOK. LOCATE ON BACK SIDE OF BATHROOM STALL DOORS

ROOM FINISH SCHEDULE

MARK	ROOM NAME	FLOOR	BASE	WALLS				CEILING TYPE	CEILING HEIGHT	REMARKS
				NORTH	EAST	SOUTH	WEST			
100	RESTROOM VESTIBULE	SC						PREFINISHED METAL	10'-8"	
101	MENS RESTROOM	SC		TILE	TILE	TILE	TILE	PREFINISHED METAL	14'-0"	
102	WOMENS RESTROOM	SC		TILE	TILE	TILE	TILE	PREFINISHED METAL	14'-0"	
103	JANITOR CLOSET	SC		PTD-1 /	PTD-1	PTD-1	PTD-1	PREFINISHED METAL	14'-0"	
104	STORAGE	SC		PTD-1 /	PTD-1	PTD-1	PTD-1	PREFINISHED METAL	14'-0"	
105	STORAGE	SC		PTD-1 /	PTD-1	PTD-1	PTD-1	PREFINISHED METAL	14'-0"	
106	MULTI USE SPACE	SC						PREFINISHED METAL		

FINISH LEGEND

PTD-1 SHERWIN WILLIAMS COLOR TBD

TILE

T-1 DALTILE, COLOR WHEEL LINEAR 4" X 12" WALL TILE. PROVIDE SCHLUTER FINEC CORNER TRIM AT ALL OUTSIDE CORNER LOCATIONS. COLOR TO BE MATTE BISCUIT K775, GROUT TO MATCH TILE.

T-2 DALTILE, COLOR WHEEL LINEAR 4" X 12" WALL TILE. PROVIDE SCHLUTER FINEC CORNER TRIM AT ALL OUTSIDE CORNER LOCATIONS. COLOR TO BE MATTE ARTICLE WHITE 0790, GROUT TO MATCH TILE.

T-3 DALTILE, COLOR WHEEL LINEAR 4" X 12" WALL TILE. PROVIDE SCHLUTER FINEC CORNER TRIM AT ALL OUTSIDE CORNER LOCATIONS. COLOR TO BE MATTE URBAN PUTTY 0761, GROUT TO MATCH TILE.

CONCRETE

SC STAINED AND SEALED CONCRETE. COLOR TO BE SELECTED BY ARCHITECT FROM MANUFACTURERS AVAILABLE COLORS.

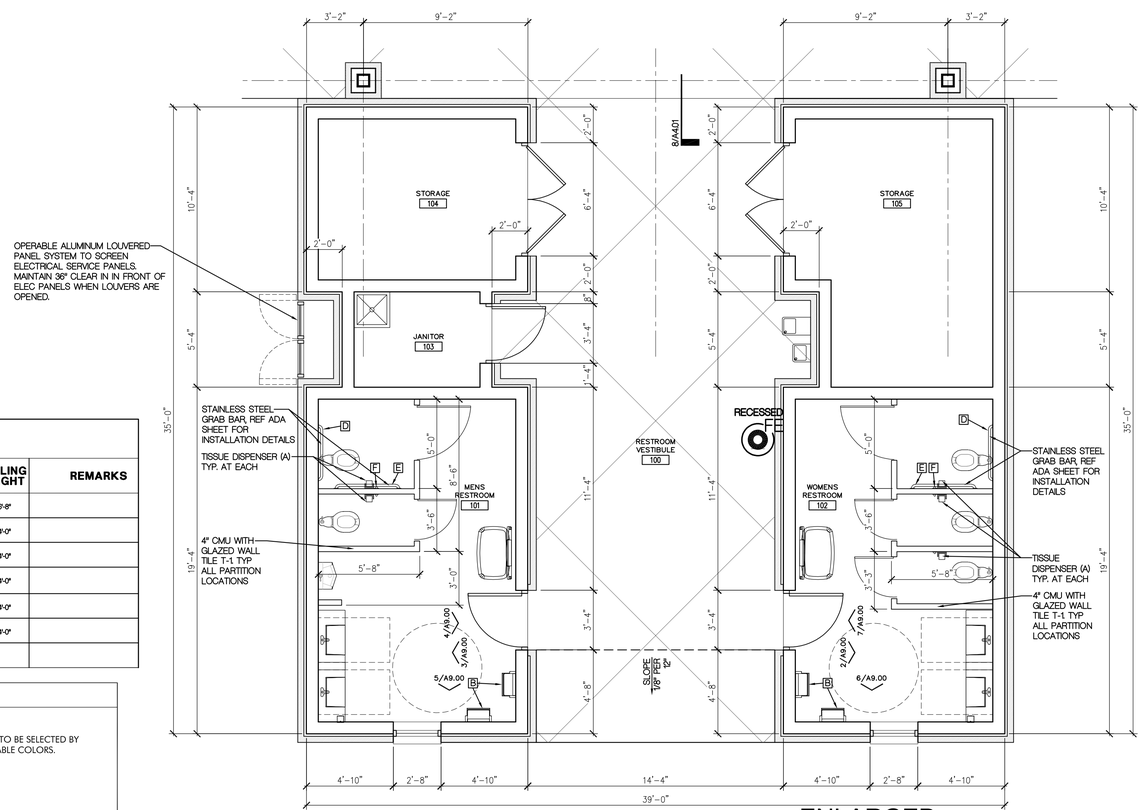

1 ENLARGED FLOOR PLAN
SCALE: 1/4"=1'-0"

WHLC | ARCHITECTURE

TRANSIT HUB PAVILION

LOXLEY MUNICIPAL PARK
LOXLEY, ALABAMA

washer hill lipscomb cabaniss architecture, llc
copyright 2022
70 south section st fairhope, al
t 251.990.6200

21-205
AUG 7TH, 2023
BID DOCUMENTS 100%

INTERIOR ELEVATIONS
ENLARGED PLAN

A9.00

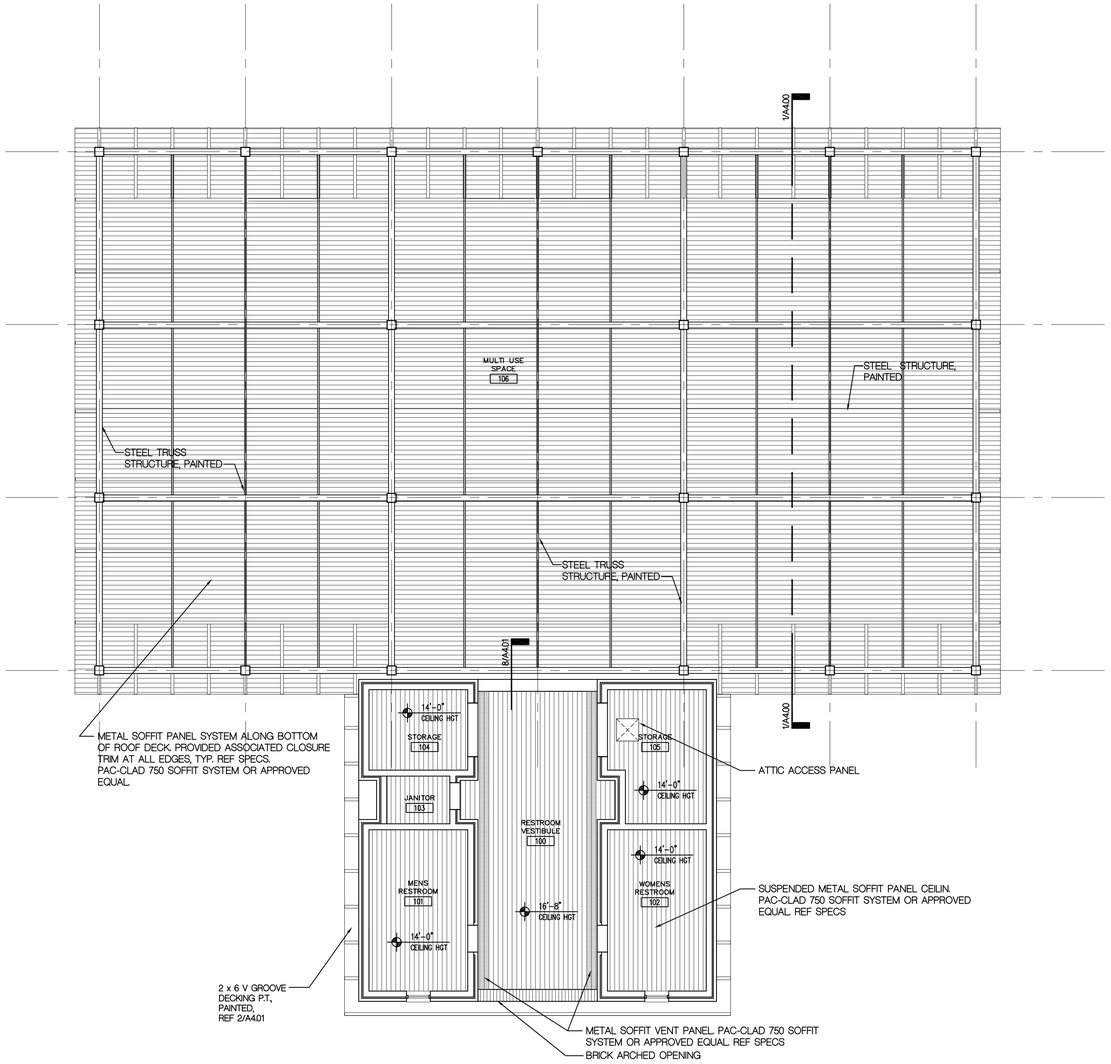

1 REFLECTED CEILING PLAN
SCALE: 1/8"=1'-0"

WHLC | ARCHITECTURE

TRANSIT HUB PAVILION

LOXLEY MUNICIPAL PARK
LOXLEY, ALABAMA

washer hill lipscomb cabaniss architecture, llc
copyright 2022

70 south section st fairhope, al
t 251.990.6200

21-205
AUG 7TH, 2023
BID DOCUMENTS 100%

REFLECTED CEILING PLAN

A10.00

ELECTRICAL LEGEND

GENERAL ELECTRICAL DEVICES:

$ SINGLE POLE LIGHTING SWITCH. MOUNT 48" TO TOP OF BOX AFF UNLESS NOTED OTHERWISE. SUBSCRIPT INDICATES AS FOLLOWS:
- M - 30 AMP TWO POLE MOTOR RATED SWITCH MOUNTED AT THE EQUIPMENT. PROVIDE PHENOLIC LABEL.
- D - 0-10V DIMMER. SWITCH SHALL BE PROGRAMMED TO BE MANUAL ON.
- S1 - MANUAL OVERRIDE FOR RESTROOM VESTIBULE LIGHTS.
- S2 - MANUAL OVERRIDE FOR MULTI USE SPACE.

DUPLEX RECEPTACLE NEMA 5-20R. MOUNT 18" AFF UNLESS NOTED OTHERWISE. VERIFY DUPLEX MOUNTING REQUIREMENTS WITH ARCHITECTURAL DRAWINGS PRIOR TO ROUGH-IN. SUBSCRIPT INDICATES AS FOLLOWS:
- G - GROUND FAULT CIRCUIT INTERRUPTER TYPE.
- WP - TAYMAC LOCKABLE GFI DEVICE WITH DIECAST WEATHERPROOF BACKBOX & DIECAST COVER. IN EXTERIOR LOCATIONS MOUNT 72" AFG UNLESS NOTED OTHERWISE. OUTLETS ARE TO BE RECESSED STYLE, INSET INTO BRICK VENEER TO ENSURE MINIMAL PROJECTION.
- EWC - CONCEAL RECEPTACLE BEHIND EWC (COORDINATE WITH DIVISION 15).
- 84" - MOUNTING HEIGHT OF DEVICE AFF.
- 21 - # INDICATES PANELBOARD CKT NUMBER

DUPLEX RECEPTACLE MOUNTED 42" AFF. OR MOUNT 7" ABOVE COUNTER. VERIFY COUNTER HEIGHT PRIOR TO ROUGH-IN. ORIENT WITH LONG AXIS HORIZONTAL ABOVE COUNTERS.

LIGHTING CONTROL EQUIPMENT:

PC PHOTOELECTRIC CELL. SEE LIGHTING CONTROL DIAGRAM AND CONNECT AS REQUIRED.

TC PROGRAMMABLE TIME CLOCK. SEE DETAIL.

$LV WALL MOUNTED LOW VOLTAGE LIGHT SWITCH. MOUNT 48" AFF UNLESS NOTED OTHERWISE. SWITCH SHALL BE PROGRAMMED TO BE MANUAL ON.

INV 100VA BODINE INVERTER, ELIS100.

OCCUPANCY SENSORS:

D WALL MOUNTED LINE VOLTAGE DUAL TECHNOLOGY SWITCH WITH SINGLE RELAY. MOUNT 48" AFF UNLESS NOTED OTHERWISE. SWITCH SHALL BE PROGRAMMED TO BE MANUAL ON.

PP2 POWER PACK WITH 2 RELAYS FOR 2 CIRCUITS. PROVIDE WITH NEMA 1 ENCLOSURE.

DISTRIBUTION & POWER EQUIPMENT:

PANELBOARD. MOUNT AS INDICATED. SEE PANELBOARD SCHEDULES.

DISTRIBUTION PANELBOARD. MOUNT AS INDICATED. SEE PANELBOARD SCHEDULES.

NON-FUSED GENERAL DUTY SAFETY SWITCH. SIZE FOR LOAD BEING SERVED.

MISCELLANEOUS EQUIPMENT:

EF EXHAUST FAN.

E ELECTRICAL CONNECTION TO EQUIPMENT. VERIFY LOCATION WITH EQUIPMENT PROVIDER.

OTHER:

CIRCUIT RUN CONCEALED ABOVE CEILING OR IN WALL.

CIRCUIT RUN CONCEALED IN OR BELOW FLOOR SLAB OR UNDERGROUND.

E EMERGENCY (NEC ART. 700) CIRCUIT RUN CONCEALED ABOVE CEILING OR IN WALL.

2P2-9 / # HOMERUN TO PANELBOARD. ANY CIRCUIT WITHOUT FURTHER DESIGNATION SHALL BE 2#12,#12G,3/4"C. TICK MARKS INDICATE # OF CONDUCTORS (EGC NOT SHOWN). MINIMUM SIZE ON 120V HOMERUNS GREATER THAN 50 FEET SHALL BE #10 AWG. MINIMUM SIZE ON 120V HOMERUNS GREATER THAN 100 FEET SHALL BE #8 AWG. MINIMUM SIZE ON 120V HOMERUNS GREATER THAN 160 FEET SHALL BE #6 AWG. MINIMUM SIZE ON 277V HOMERUNS GREATER THAN 100 FEET SHALL BE #10 AWG. INCREASE CONDUIT SIZE AS REQUIRED PER NEC. UNDERLINED TEXT INDICATES CIRCUIT DESIGNATION.

AHU 1 MECHANICAL EQUIPMENT IDENTIFICATION TAG. SEE MECHANICAL EQUIPMENT ELECTRICAL SCHEDULE.

F2L LIGHT FIXTURE IDENTIFICATION TAG. SEE LIGHT FIXTURE SCHEDULE FOR SYMBOLS & DETAILS.

1 SHEET NOTE TAG.

4LP1 PANELBOARD, SWITCHBOARD, TRANSFORMER & ELECTRICAL EQUIPMENT IDENTIFICATION TAG.

NAME 100 ROOM NUMBER TAG.

LEADERS.

UNDERGROUND CONDUIT SYSTEM LEGEND

—— P —— POWER

ABBREVIATIONS

A	AMPS	MCM	THOUSAND CIRCULAR MILS
AC	ABOVE COUNTER	MH	MANHOLE
AF	AMP FRAME	MIN	MINIMUM
AFF	ABOVE FINISHED FLOOR	MISC	MISCELLANEOUS
AFG	ABOVE FINISHED GRADE	MLO	MAIN LUGS ONLY
AHU	AIR HANDLING UNIT	MNT	MOUNTING HEIGHT
AL	ALUMINUM	MTG	MOUNTING
ARCH	ARCHITECT OR ARCHITECTURAL	MTS	MANUAL TRANSFER SWITCH
AT	AMP TRIP	MV	MEDIUM VOLTAGE
ATS	AUTOMATIC TRANSFER SWITCH	N1	NEMA 1
ATU	AIR TERMINAL UNIT	N3R	NEMA 3R
AWG	AMERICAN WIRE GAUGE	N/A	NOT APPLICABLE
BAS	BUILDING AUTOMATION SYSTEM	NA	NOT APPLICABLE
BFG	BELOW FINISHED GRADE	NEC	NATIONAL ELECTRICAL CODE
BJ	BONDING JUMPER	NESC	NATIONAL ELECTRICAL SAFETY CODE
BKR	CIRCUIT BREAKER	NEU	NEUTRAL
BLDG	BUILDING	OCPD	OVERCURRENT PROTECTION DEVICE
BOD	BASIS OF DESIGN	OFOI	OWNER FURNISHED OWNER INSTALLED
C	CONDUIT	OFCI	OWNER FURNISHED CONTRACTOR INSTALLED
C/B	CIRCUIT BREAKER	OH	OVERHEAD
CL	CURRENT LIMITING	OHE	OVERHEAD ELECTRIC
C/L	CENTERLINE	OHP	OVERHEAD PRIMARY
CLG	CEILING	OHS	OVERHEAD SECONDARY
CKT	CIRCUIT	PBD	PANELBOARD
CT	CURRENT TRANSFORMER	PF	POWER FACTOR
CU	COPPER	PNL	PANELBOARD
DDC	DIRECT DIGITAL CONTROL	PT	POTENTIAL TRANSFORMER
DEMO	DEMOLISH	PWR	POWER
EC	ELECTRICAL CONTRACTOR	REC	RECEPTACLE
EGC	EQUIPMENT GROUNDING CONDUCTOR	REQD	REQUIRED
ELEC	ELECTRICAL	RM	ROOM
EMGB	ELECTRICAL MAIN GROUNDING BUSBAR	RGS	RIGID GALVANIZED STEEL CONDUIT
EF	EXHAUST FAN	RNC	RIGID NON-METALLIC CONDUIT
EX	EXISTING TO REMAIN	RVSS	REDUCED VOLTAGE SOLID STATE
EXT	EXTERIOR	SA	SURGE ARRESTER
EWC	ELECTRIC WATER COOLER	SCA	SHORT CIRCUIT AMPS
EMT	ELECTRICAL METALLIC TUBING	SF	SUPPLY FAN
EQUIP	EQUIPMENT	SPEC	SPECIFICATION
FMC	FLEXIBLE METAL CONDUIT	SWBD	SWITCHBOARD
FACP	FIRE ALARM SYSTEM CONTROL PANEL	SWGR	SWITCHGEAR
FU	FUSE	TBB	TELECOMMUNICATIONS BONDING BACKBONE
F/A	FIRE ALARM	TR	TELECOMMUNICATIONS ROOM
FLA	FULL LOAD AMPS	TGB	TELECOMMUNICATIONS GROUNDING BUSBAR
FLR	FLOOR	TMGB	TELECOMMUNICATIONS MAIN GROUNDING BUSBAR
FVNR	FULL VOLTAGE NON-REVERSING	TVSS	TRANSIENT VOLTAGE SURGE SUPPRESSION
GFI	GROUND FAULT INTERRUPTER	TYP	TYPICAL
G	GROUND (OR GFI FOR RECEPTACLE SUBSCRIPT)	UFR	UNDERFLOOR RACEWAY
GC	GENERAL CONTRACTOR	UG	UNDERGROUND
GND	GROUND	UGE	UNDERGROUND ELECTRIC
GEC	GROUNDING ELECTRODE CONDUCTOR	UGP	UNDERGROUND PRIMARY
HH	HANDHOLE	UGS	UNDERGROUND SECONDARY
HOA	HAND-OFF-AUTOMATIC	UL	UNDERWRITERS' LABORATORIES
HP	HEAT PUMP OR HORSEPOWER	UNO	UNLESS NOTED OTHERWISE
HVAC	HEATING, VENTILATION & AIR-CONDITIONING	UPS	UNINTERRUPTIBLE POWER SUPPLY
IG	ISOLATED GROUND	V	VOLT
IMC	INTERMEDIATE METAL CONDUIT	VA	VOLT-AMPERES
JB	JUNCTION BOX	VAR	VOLT-AMPERES REACTIVE
k	KILO	VAV	VARIABLE AIR VOLUME UNIT
kAIC	KILO-AMPERE INTERRUPTING CAPABILITY	W	WATTS
kCMIL	THOUSAND CIRCULAR MILS	WAO	WORK AREA OUTLET
LCP	LIGHTING CONTROL PANEL	WP	WEATHERPROOF
LTG	LIGHTING	WSR	WITHSTAND RATING
LFMC	LIQUID TIGHT FLEXIBLE METAL CONDUIT	XFMR	TRANSFORMER
LV	LOW VOLTAGE	XP	EXPLOSION PROOF
MAX	MAXIMUM	ϕ	PHASE
MCA	MINIMUM CIRCUIT AMPACITY	72°	DEGREES
MCC	MOTOR CONTROL CENTER	Δ	DELTA
MCE	MAIN COMMUNICATIONS EQUIPMENT ROOM	Ω	OHMS

WHLC | ARCHITECTURE

dell consulting
Andrew W. Maurin 25105
Alabama Certificate Number C-441-66-E
1810 Dauphin Island Parkway Suite 120
Mobile, Alabama 36605
P 251-314-0015 F 855-332-6429
Dell Consulting project 22-109

TRANSIT HUB PAVILION

LOXLEY MUNICIPAL PARK
LOXLEY, ALABAMA

ALABAMA LICENSED No. 25105 PROFESSIONAL ENGINEER ANDREW W. MAURIN
5-23-2023

washer hill lipscomb cabaniss
architecture, llc
copyright 2022

70 south section st fairhope, al
t 251.990.6200

21-205
May 23, 2023

ELECTRICAL LEGEND
& ABBREVIATIONS

E1.00

ELECTRICAL SPECIFICATIONS

1. GENERAL ELECTRICAL:
   - 1.1. THE CONTRACTOR SHALL FURNISH ALL LABOR, MATERIALS AND EQUIPMENT NECESSARY FOR THE INSTALLATION OF A COMPLETE ELECTRICAL SYSTEM AS INDICATED WITHIN THESE DRAWINGS. ALL WORK SHALL BE INSTALLED IN STRICT ACCORDANCE WITH ALL APPLICABLE CODES AND ORDINANCES AND WITH MANUFACTURER'S RECOMMENDATIONS.
   - 1.2. THE CONTRACTOR SHALL CAREFULLY EXAMINE THE ARCHITECTURAL, STRUCTURAL, ELECTRICAL AND MECHANICAL DRAWINGS PRIOR TO SUBMITTING HIS BID. THE CONTRACTOR WILL BE REQUIRED TO FURNISH, INSTALL AND CONNECT ALL ITEMS AS INDICATED ON THE DRAWINGS.
   - 1.3. THE ARCHITECT SHALL BE NOTIFIED OF ANY CONFLICTS, OR INTERFERENCES THAT OCCUR BETWEEN INDIVIDUAL DRAWINGS.
   - 1.4. ALL MATERIALS AND EQUIPMENT SHALL BE INSTALLED IN A NEAT, FIRST CLASS, WORKMANLIKE MANNER, TO THE APPROVAL OF THE ARCHITECT/ENGINEER AND GOVERNING AUTHORITIES.
   - 1.5. IN ADDITION TO THE MANUFACTURERS STANDARD GUARANTEES, THE CONTRACTOR SHALL GUARANTEE ALL MATERIALS, EQUIPMENT AND WORKMANSHIP AGAINST DEFECTS FOR ONE YEAR FROM THE DATE OF FINAL ACCEPTANCE, AND SHALL CORRECT ANY DEFECTS AT NO ADDITIONAL COST TO THE OWNER. ALL LAMPS SHALL BE GUARANTEED FOR 30 DAYS AFTER ACCEPTANCE.
   - 1.6. THE LOADS SHOWN FOR APPLIANCES AND EQUIPMENT ARE BASED ON DESIGN INFORMATION. THE CONTRACTOR SHALL VERIFY ALL APPLIANCE LOADS PRIOR TO RUNNING THE CIRCUIT. THE MINIMUM CIRCUIT REQUIREMENTS SHALL BE BASED ON THE APPLIANCE NAMEPLATE VALUE OR CODE REQUIREMENTS, WHICHEVER IS MORE STRINGENT. ADDITIONAL COMPENSATION SHALL NOT BE ALLOWED FOR APPLIANCE MODIFICATIONS BY THE CONTRACTOR.
   - 1.7. PRIOR APPROVAL: PRIOR APPROVAL SHALL BE REQUIRED FOR ANY MANUFACTURER OTHER THAN THOSE LISTED FOR ALL SPECIFIED ITEMS IN THESE DRAWINGS. SUBMIT ALL REQUESTS FOR PRIOR APPROVAL 2 WEEKS PRIOR TO BID OPENING. ENGINEER'S APPROVAL WILL BE IN THE FORM OF AN ADDENDUM.
   - 1.8. APPROVAL SUBMITTALS: PROVIDE 6 COPIES OF APPROVAL SUBMITTALS FOR ALL EQUIPMENT BEING PROVIDED FOR ENGINEERS REVIEW.

2. CODES & STANDARDS:
   - 2.1. INSTALLATION AND MATERIALS SHALL COMPLY WITH THE LATEST ADOPTED EDITION OF THE FOLLOWING CODES & STANDARDS:
     - 2.1.1. NATIONAL ELECTRICAL CODE.
     - 2.1.2. NFPA 72. NATIONAL FIRE PROTECTION CODE.
     - 2.1.3. INTERNATIONAL BUILDING CODE.
     - 2.1.4. INTERNATIONAL ENERGY CONSERVATION CODE.
     - 2.1.5. NFPA 101.
     - 2.1.6. ADA .
     - 2.1.7. ANSI.
     - 2.1.8. NEMA.
     - 2.1.9. OSHA.
     - 2.1.10. UL.

3. ALTERATIONS & ADDITIONS TO EXISTING WORK:
   - 3.1. PROVIDE ALL NECESSARY ADDITIONS AND ALTERATIONS TO EXISTING WORK AS REQUIRED TO PROVIDE AND MAINTAIN A COMPLETE AND PROPER ELECTRICAL INSTALLATION.
   - 3.2. AS NECESSARY, RELOCATE EXISTING ELECTRICAL WORK SO OTHER TRADES CAN PURSUE THEIR WORK.
   - 3.3. MAINTAIN POWER TO EXISTING PORTIONS OF BUILDINGS FED FROM OR THROUGH AREA IN SCOPE OF THIS CONTRACT.
   - 3.4. COORDINATE ALL REQUIRED OUTAGES WITH OWNER.

4. BASIC MATERIALS & METHODS:
   - 4.1. ALL POWER AND DISTRIBUTION CABLING SHALL BE COPPER TYPE THWN/THHN.
   - 4.2. ALL ELECTRICAL EQUIPMENT, DEVICES, ETC. LOCATED OUTDOORS SHALL BE WEATHERPROOF.
   - 4.3. ELECTRICAL CONTRACTOR SHALL PROVIDE ADEQUATE AND PROPER SUPPORT FOR ALL ELECTRICAL OUTLETS, DEVICES, LIGHT FIXTURES, ETC. BUILT IN OR MOUNTED ON CEILINGS. NO OUTLET BOX, DEVICE, LIGHT FIXTURE, ETC. SHALL BE SUPPORTED FROM ANY ACOUSTICAL CEILING TILE OR DRYWALL CEILINGS. PROVIDE METAL SUPPORTS THAT ARE MADE FOR USE WITH CEILING GRID SYSTEMS OR PROVIDE HANGERS FROM STRUCTURE ABOVE.
   - 4.4. CONDUIT ROUTINGS AND DEVICE/EQUIPMENT LOCATIONS SHOWN ARE DIAGRAMMATIC ONLY, CONTRACTOR SHALL FIELD ROUTE AND LOCATE AS REQUIRED. CONDUIT ROUTINGS SHALL BE PARALLEL OR PERPENDICULAR TO BUILDING LINES.
   - 4.5. JUNCTION BOXES LOCATED ABOVE CEILING SHALL BE INSTALLED FACING DOWN AND SHALL BE ACCESSIBLE AFTER INSTALLATION.
   - 4.6. COORDINATE ALL ELECTRICAL WORK WITH OTHER TRADES AND STRUCTURAL COMPONENTS.
   - 4.7. THE CONDUIT MATERIAL SHALL BE AS FOLLOWS:
     - 4.7.1. BELOW GRADE - RNC (POWER & SITE LIGHTING ONLY). ELBOWS >1-1/2" SHALL BE RGS.
     - 4.7.2. RISER FROM 36" BELOW GRADE - RGS.
     - 4.7.3. CONCEALED RISER FROM 36" BELOW GRADE - RNC (POWER ONLY).
     - 4.7.4. ABOVE GRADE SUBJECT TO PHYSICAL ABUSE - RGS.
     - 4.7.5. ABOVE GRADE NOT SUBJECT TO PHYSICAL ABUSE OR WEATHER - EMT.
     - 4.7.6. INDOORS NOT SUBJECT TO PHYSICAL ABUSE - EMT. OR METAL CLAD CABLE(AS ALLOWED BY LOCAL AUTHORITY HAVING JURISDICTION).
     - 4.7.7. FINAL CONDUIT CONNECTIONS TO HEAT PUMPS, AIR HANDLERS, EXHAUST FANS, AND WATER HEATERS SHALL BE LFMC WHETHER INTERIOR OR EXTERIOR.
   - 4.8. CONDUIT FITTINGS SHALL BE AS FOLLOWS:
     - 4.8.1. EMT - <=2" USE STEEL SET SCREW WITH INSULATED THROATS FOR INTERIOR/ USE COMPRESSION FITTINGS WITH INSULATED THROATS FOR EXTERIOR, >2" USE SET-SCREW STEEL WITH INSULATED THROATS.
     - 4.8.2. RGS - THREADED GALVANIZED STEEL.
     - 4.8.3. PVC - PVC APPROVED FOR THE USE.
     - 4.8.4. FMC - ZINC-PLATED STEEL OR CADMIUM-PLATED MALLEABLE IRON SCREW TYPE WITH INSULATED THROAT.
     - 4.8.5. LFMC - CADMIUM-PLATED MALLEABLE IRON OR STEEL COMPRESSION TYPE WITH INSULATED THROAT.
   - 4.9. ALL OUTLET BOXES SHALL BE 4"X4"X1-1/2" DEEP MINIMUM.
   - 4.10. ELECTRICAL CONTRACTOR SHALL WORK CLOSELY WITH THE MASONRY CONTRACTOR ON THE INSTALLATION OF ALL ELECTRICAL BOXES, CABINETS, RINGS, ETC. IN MASONRY WALLS. THE BOXES SHALL BE INSTALLED AT THE UNIFORM HEIGHTS CALLED FOR ON THE DRAWINGS AND SPECIFICATIONS. PROVIDE APPROPRIATE DEPTH MASONRY RINGS FOR ALL OUTLETS IN MASONRY WALLS TO INSURE PROPER CUTTING AND FITTING. THE FACE OF THE CABINETS, BOXES, RINGS, ETC. SHALL BE PLUMB AND FLUSH WITH THE FACE OF THE FINISH MATERIAL. ANY CABINET, OUTLET BOX, ETC. NOT MEETING THE ABOVE REQUIREMENT SHALL BE REMOVED AND REINSTALLED AT NO ADDITIONAL COST TO THE OWNER.
   - 4.11. ALL SIDEWALKS AND PARKING LOT ASPHALT AREAS THAT ARE CUT DUE TO NEW ELECTRICAL SERVICES SHALL BE REPAIRED TO MATCH EXISTING.
   - 4.12. ALL DIMENSIONS TO DEVICES AFF SHALL BE TO CENTERLINE UNLESS NOTED OTHERWISE.
   - 4.13. WALL OUTLETS SHALL NOT BE INSTALLED BACK TO BACK.
   - 4.14. COORDINATE LOCATIONS OF ELECTRICAL EQUIPMENT, DEVICES, OUTLETS, FIXTURES, ETC., WITH ARCHITECTURAL PLANS, ELEVATIONS AND REFLECTED CEILING PLANS PRIOR TO ROUGH-IN WORK.

5. GROUNDING & BONDING:
   - 5.1. PROVIDE AN INSULATED EQUIPMENT GROUNDING CONDUCTOR IN ALL CONDUITS.
   - 5.2. GROUND RODS SHALL BE 3/4"X20' COPPERCLAD STEEL.
   - 5.3. BELOW GRADE CONNECTIONS SHALL BE EXOTHERMIC TYPE.
   - 5.4. ALL CABLES SHALL BE COPPER, ALL BOLTED CONNECTIONS SHALL BE BRONZE.
   - 5.5. PROVIDE A #6AWG MINIMUM GROUND IN EMT FROM EACH TELCOM BACKBOARD TO THE MAIN ELECTRICAL SERVICE GROUND.
   - 5.6. WHERE AVAILABLE, BOND TO BUILDING STRUCTURAL STEEL, BUILDING FOUNDATION STEEL, METAL WATER SERVICE PIPING.
   - 5.7. PROVIDE THREE 20' GROUND RODS IN TRIANGLE ARRANGEMENT ON 20' CENTERS FOR MADE ELECTRODE SYSTEM. THE ELECTRICAL CONTRACTOR SHALL BOND NEW COPPER CLAD GROUND RODS WITH TINNED STRANDED BARE COPPER CONDUCTOR.

6. IDENTIFICATION:
   - 6.1. PROVIDE ENGRAVED 1"X3" PHENOLIC LABELS FOR ALL PANELBOARDS, SAFETY SWITCHES, TRANSFORMERS, CABINETS, ETC.
   - 6.2. PAINT THE RACEWAY SYSTEM COUPLINGS AND BOX COVERS ABOVE CEILINGS FOR THE FOLLOWING SYSTEMS AS FOLLOWS:
     - 6.2.1. 208 VOLT SYSTEMS - BLACK.
     - 6.2.2. 4AFTER PAINTING, WRITE THE CIRCUIT NUMBER (I.E. "LPA-34") ON ALL BRANCH CIRCUIT JUNCTION BOX COVERS ABOVE CEILING WITH WHITE MARKER.

7. GENERAL WIRING DEVICES:
   - 7.1. SWITCHES - SPECIFICATION GRADE, 20 AMP, COLOR BY ARCHITECT.
   - 7.2. RECEPTACLES - SPECIFICATION GRADE, 20 AMP, NEMA 5-20R, COLOR BY ARCHITECT.
   - 7.3. COVER PLATES - NYLON, COLOR BY ARCHITECT.
   - 7.4. APPROVED MANUFACTURERS - HUBBELL, LEVITON, EAGLE, PASS & SEYMOUR.

8. SAFETY SWITCHES:
   - 8.1. GENERAL DUTY, VISIBLE BLADE, LOCKABLE, QUICK-MAKE/QUICK-BREAK, HORSEPOWER RATED, FUSED WHERE INDICATED.
   - 8.2. PROVIDE WITH GROUND LUG KIT.
   - 8.3. INTERIOR - NEMA 1.
   - 8.4. APPROVED MANUFACTURERS - SQUARE D, GENERAL ELECTRIC, CUTLER-HAMMER SIEMENS, EATON

9. PANELBOARDS:
   - 9.1. FRONT ACCESSIBLE, BOLT-ON MOLDED CASE C/Bs, COPPER PHASE & NEUTRAL BUSSING, COPPER GROUND BAR, FULLY RATED (SERIES RATING NOT ALLOWED).
   - 9.2. ENCLOSURES SHALL BE DOOR-IN-DOOR CONSTRUCTION.
   - 9.3. INTERIOR - NEMA 1.
   - 9.4. ALL INTERIOR PANELBOARDS ARE TO HAVE FOUR SPARE 3/4" CONDUITS INSTALLED TO AN ACCESSIBLE SPACE FOR FUTURE.
   - 9.5. EXTERIOR - NEMA 3R.
   - 9.6. PROVIDE TYPE-WRITTEN DIRECTORY IN CLEAR SLEEVE ON INSIDE OF DOOR.
   - 9.7. APPROVED MANUFACTURERS - SQUARE D, GENERAL ELECTRIC, CUTLER-HAMMER, SIEMENS, EATON.

10. LIGHTING:
    - 10.1. PROVIDE A 6'-0" MAXIMUM FLEXIBLE CONNECTION FROM EACH RECESSED LIGHTING FIXTURE TO JUNCTION BOX ABOVE CEILING.
    - 10.2. FOR FIXTURES IN LAY-IN CEILINGS, PROVIDE WIRE SUPPORTS AT ALL FOUR CORNERS OF FIXTURE SEPARATE FROM LAY-IN CEILING WIRE SUPPORTS.
    - 10.3. ELECTRONIC BALLASTS SHALL BE INSTANT START, <10%THD, SOUND RATED A, OUTPUT FREQUENCY >40kHz, CONTAIN NO PCBs, SYLVANIA QTP SERIES OR ADVANCE CENTIUM SERIES.
    - 10.4. APPROVED MANUFACTURERS FOR LAMPS SHALL BE GE, SYLVANIA, PHILIPS.

11. STRUCTURED CABLING SYSTEM:
    - 11.1. THE SCOPE OF THIS CONTRACT INCLUDES RACEWAYS ONLY, IT DOES NOT INCLUDE CABLES, CABLE TERMINATIONS, EQUIPMENT, ETC.

WHLC | ARCHITECTURE

dell consulting engineers
Andrew W. Maurin 25105
Alabama Certificate Number C-441-66-E
Expiration Date: December 31, 2023
Mobile, Alabama 36609
p 251-316-6015 f 888-332-8429
Dell Consulting project 22-199

TRANSIT HUB PAVILION

LOXLEY MUNICIPAL PARK
LOXLEY, ALABAMA

ALABAMA LICENSED No. 25105 PROFESSIONAL ENGINEER ANDREW W. MAURIN
Andrew W. Maurin
5-23-2023

washer hill lipscomb cabaniss
architecture, llc
copyright 2022

70 south section st fairhope, al
t 251.990.6200

21-205
May 23, 2023

ELECTRICAL SPECIFICATIONS

E1.10

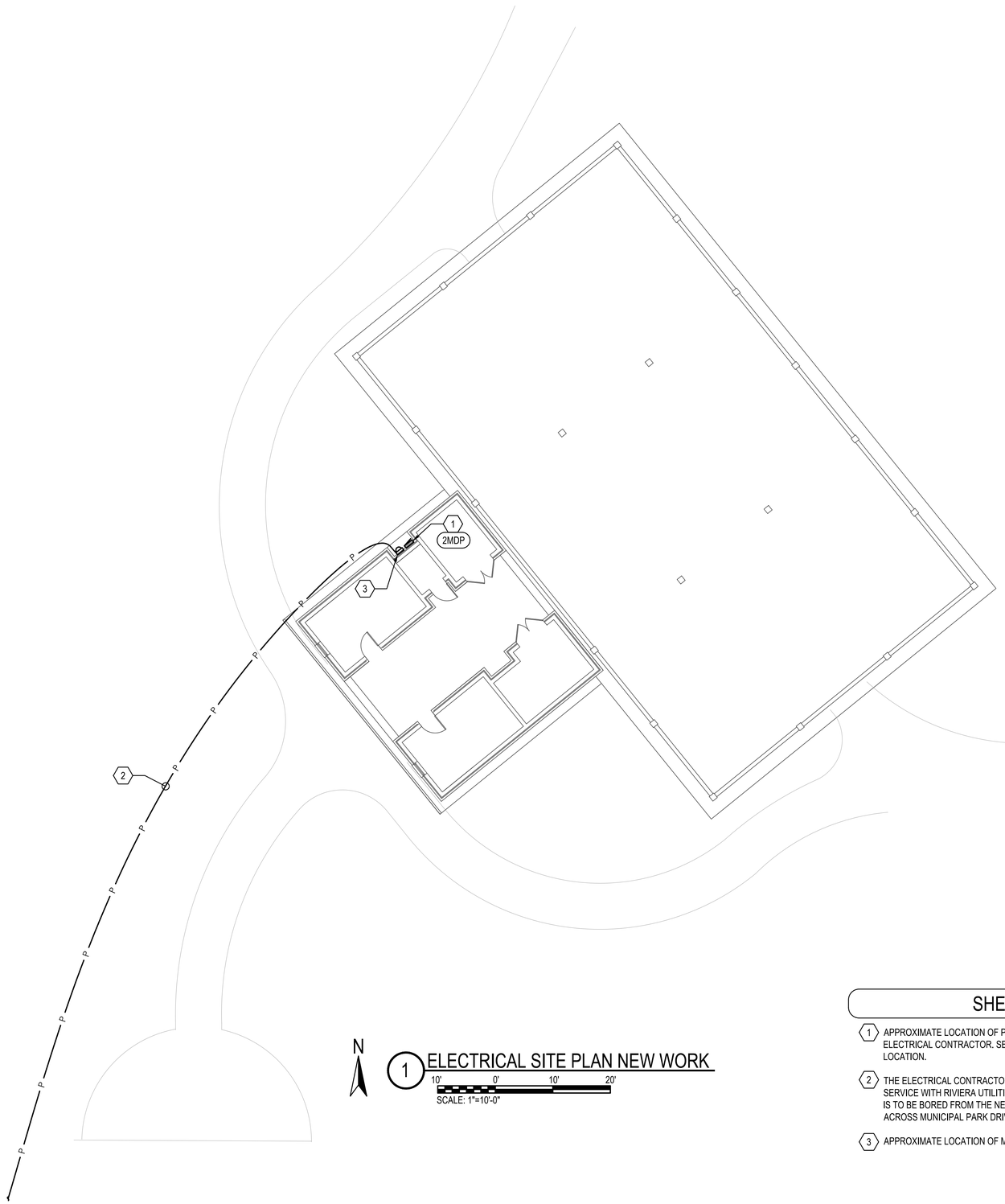

1 ELECTRICAL SITE PLAN NEW WORK

10' 0' 10' 20'

SCALE: 1"=10'-0"

SHEET NOTES

1. APPROXIMATE LOCATION OF PANELBOARD TO BE INSTALLED BY THE ELECTRICAL CONTRACTOR. SEE NEW WORK ELECTRICAL PLANS FOR EXACT LOCATION.
2. THE ELECTRICAL CONTRACTOR IS TO COORDINATE ALL ASPECTS OF THE NEW SERVICE WITH RIVIERA UTILITIES PRIOR TO COMMENCING WORK. THE SERVICE IS TO BE BORED FROM THE NEW METER TO THE EXISTING RIVIERA SERVICE ACROSS MUNICIPAL PARK DRIVE.
3. APPROXIMATE LOCATION OF METER TO BE ADDED BY RIVIERA UTILITIES.

WHLC | ARCHITECTURE

dell consulting
MEP Engineering
Andrew W. Maurin 25105
Alabama Certificate Number CA-4146-E
813 Downtowner Blvd, Suite D
Mobile, Alabama 36609
P: 251-316-0015 F: 850-332-6629
Dell Consulting project: 22-109

TRANSIT HUB PAVILION

LOXLEY MUNICIPAL PARK
LOXLEY, ALABAMA

ALABAMA LICENSED No. 25105 PROFESSIONAL ENGINEER ANDREW W. MAURIN
5-23-2023

washer hill lipscomb cabaniss architecture, llc
copyright 2022

70 south section st fairhope, al
t 251.990.6200

21-205
May 23, 2023

ELECTRICAL SITE PLAN
NEW WORK

E1.20

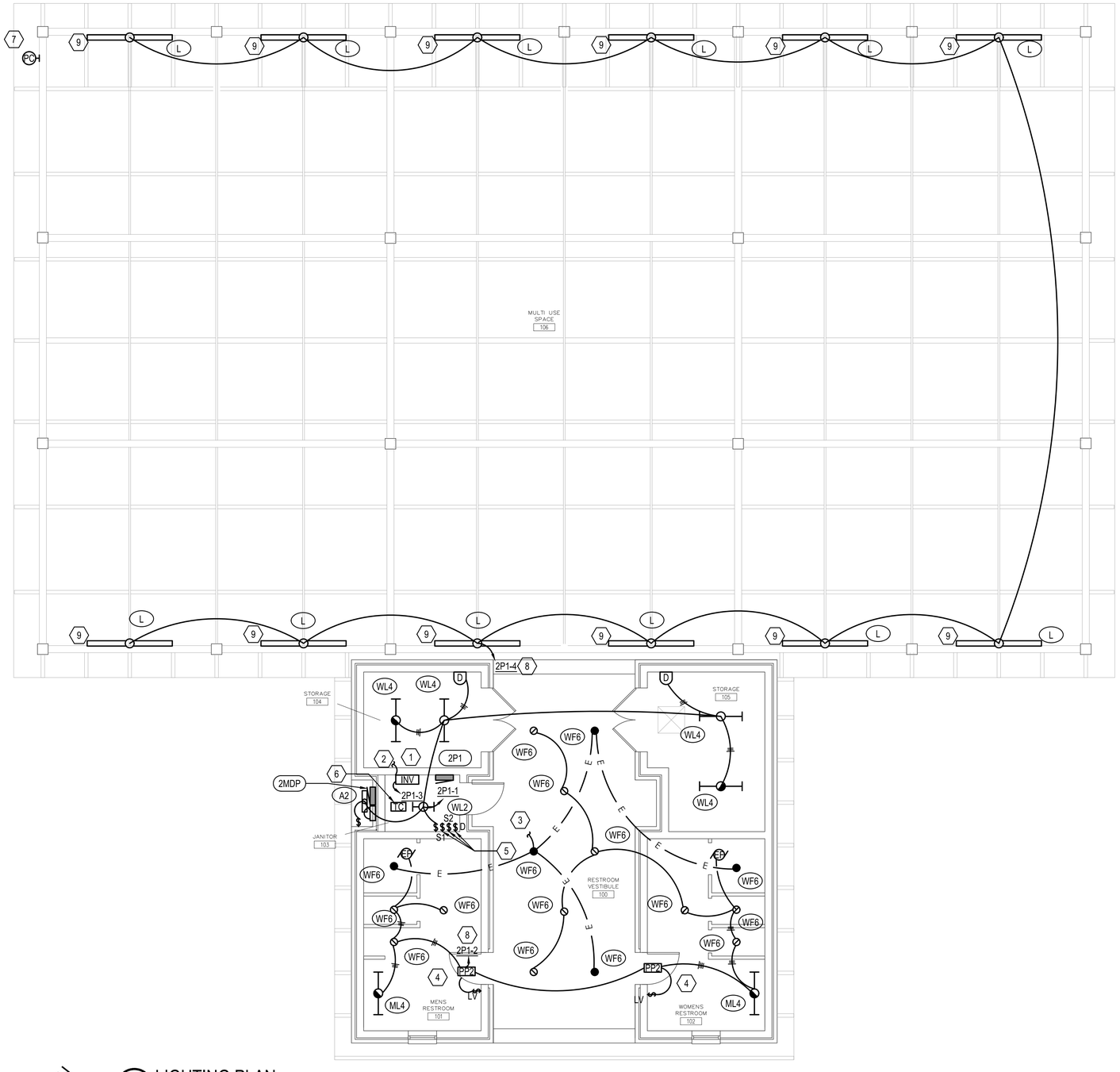

1 LIGHTING PLAN

5' 0' 5' 10'

SCALE: 3/16"=1'-0"

GENERAL NOTES

1. THE ELECTRICAL CONTRACTOR IS TO ENSURE LIGHTING FIXTURE AND PHOTOCELL CONDUIT IN MULTI USE SPACE IS CLOSELY ALIGNED TO STRUCTURAL MEMBERS TO LIMIT CONDUIT VISIBILITY. THE ELECTRICAL CONTRACTOR IS TO PAINT THE CONDUIT TO MATCH THE COLOR OF THE STRUCTURAL MEMBERS.
2. LIGHTING FIXTURES LOCATION IN MULTI USE SPACE ARE TO BE CONFIRMED IN THE FIELD WITH THE ARCHITECT.

SHEET NOTES

1. APPROXIMATE LOCATION OF ELI-S-100 TO BE INSTALLED BY ELECTRICAL CONTRACTOR. THE FINAL LOCATION IS TO BE COORDINATED WITH THE OWNER.
2. THE ELECTRICAL CONTRACTOR IS TO CONNECT THIS CIRCUIT TO THE LIGHTING FIXTURE SERVING RESTROOM VESTIBULE ROOM 100.
3. THE ELECTRICAL CONTRACTOR IS TO CONNECT THIS CIRCUIT TO THE ELI-S-100 INVERTER IN JANITOR ROOM 103.
4. THE ELECTRICAL CONTRACTOR IS TO PROGRAM THE FAN TO HAVE A 30 MINUTE DELAY AND THE LIGHTS TO HAVE A 15 MINUTE DELAY AS PER NEC CODE REQUIREMENTS.
5. THE ELECTRICAL CONTRACTOR IS TO WIRE BYPASS SWITCH #1, LEFT, #2, CENTER, AND LOW VOLTAGE DIMMER, RIGHT, PER MANUFACTURER'S REQUIREMENTS. SEE TORK DGLC200A-NC ELECTRICAL DETAIL FOR FURTHER INSTRUCTION.
6. THE ELECTRICAL CONTRACTOR IS TO CONNECT THE TIMER WITH THE CIRCUIT AS PER MANUFACTURER'S SPECIFICATIONS. THE TIMER IS TO BE PROGRAMMED BY THE ELECTRICAL CONTRACTOR AS PER THE OWNER'S SPECIFICATIONS.
7. THE PHOTOCELL IS TO BE CONNECTED BY THE ELECTRICAL CONTRACTOR TO THE TORK DGLC200A-NC AS PER MANUFACTURER'S REQUIREMENTS. THE PHOTOCELL IS TO BE INSTALLED UNDER THE EAVE OF THE DESIGNATED LOCATION.
8. THE ELECTRICAL CONTRACTOR IS TO WIRE THIS CIRCUIT THROUGH THE CONTROLS AS SHOWN IN THE TORK WIRING DIAGRAM.
9. THE ELECTRICAL CONTRACTOR IS TO MOUNT THIS LIGHTING FIXTURE TO PROVIDE INDIRECT LIGHTING TO THE SPACE. CONTRACTOR TO COORDINATE A FIELD TEST AT NIGHT WITH ARCHITECT FOR FINAL ADJUSTMENT OF FIXTURE AIMING.

WHLC | ARCHITECTURE

dell consulting
MEP Design Group
Andrew W. Maurin 25105
Alabama Certificate Number C-441-464
1150 Downtowner Blvd. Suite 120
Mobile, Alabama 36609
P 251-341-6015 F 800-332-6429
Dell Consulting Project # 22-199

TRANSIT HUB PAVILION

LOXLEY MUNICIPAL PARK
LOXLEY, ALABAMA

ALABAMA LICENSED PROFESSIONAL ENGINEER ANDREW W. MAURIN No. 25105

5-23-2023

washer hill lipscomb cabaniss architecture, llc
copyright 2022

70 south section st fairhope, al
t 251.990.6200

21-205
May 23, 2023

LIGHTING PLAN

E2.00

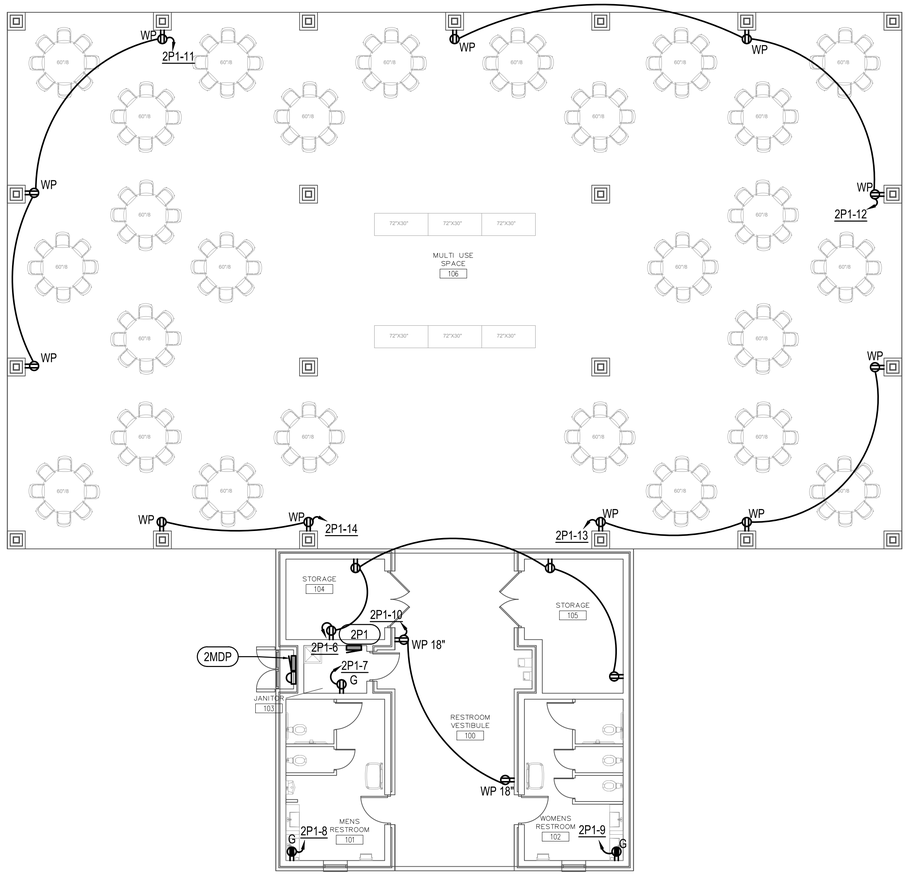

1 POWER PLAN

8' 0' 8' 16'

SCALE: 1/8"=1'-0"

WHLC | ARCHITECTURE

dell consulting
MEP Engineering
Andrew W. Maurin 25105
Alabama Certificate Number CA-4146-E
813 Downtown Blvd, Suite D
Mobile, Alabama 36609
P: 251-316-0015 F: 850-332-6629
Dell Consulting project: 22-109

TRANSIT HUB PAVILION

LOXLEY MUNICIPAL PARK
LOXLEY, ALABAMA

ALABAMA LICENSED No. 25105 PROFESSIONAL ENGINEER ANDREW W. MAURIN
5-23-2023

washer hill lipscomb cabaniss
architecture, llc
copyright 2022

70 south section st fairhope, al
t 251.990.6200

21-205
May 23, 2023

POWER PLAN

E2.10

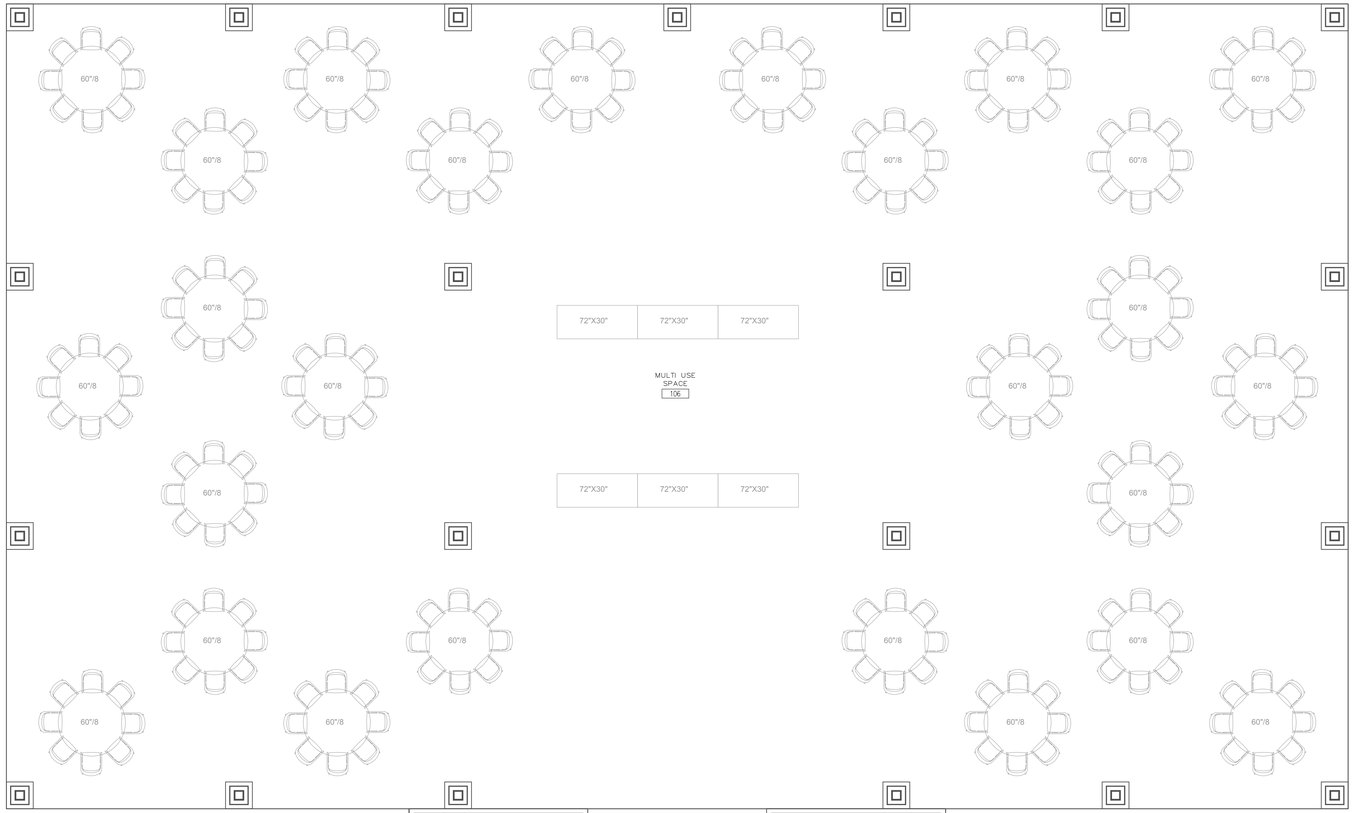

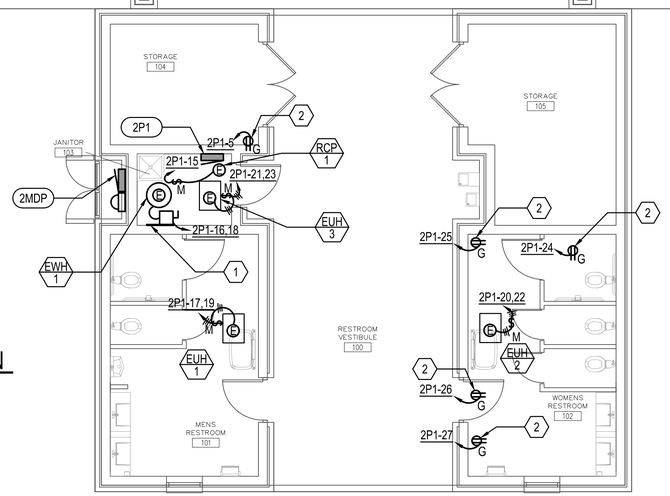

1 ELECTRICAL MECHANICAL PLAN

5' 0' 5' 10'

SCALE: 3/16"=1'-0"

SHEET NOTES

1. APPROXIMATE LOCATION OF DISCONNECT BACKBOARD 2'x2'x3/4" PLYWOOD BACKBOARD PAINTED WITH FIRE RETARDANT PAINT.
2. THE ELECTRICAL CONTRACTOR SHALL COORDINATE THE FINAL LOCATION OF THE GFI RECEPTACLE IN THE ATTIC WITH THE PLUMBING CONTRACTOR TO PROVIDE POWER FOR THE HEAT TRACED PIPING. ENSURE THE RECEPTACLE IS IN AN EASILY ACCESSIBLE PLACE.

WHLC | ARCHITECTURE

dell consulting
MEP Engineering
Andrew W. Maurin 25105
Alabama Certificate Number C-44-46-E
8310 Dawes Avenue Suite 1 Unit 10
Mobile, Alabama 36609
p 251-316-6015 f 833-332-8379
Dell Consulting project 22-209

TRANSIT HUB PAVILION

LOXLEY MUNICIPAL PARK
LOXLEY, ALABAMA

ALABAMA LICENSED PROFESSIONAL ENGINEER ANDREW W. MAURIN No. 25105
5-23-2023

washer hill lipscomb cabaniss
architecture, llc
copyright 2022

70 south section st fairhope, al
t 251.990.6200

21-205
May 23, 2023

MECHANICAL PLAN

E2.20

LIGHTING FIXTURE SCHEDULE

MARK	MANUFACTURER AND CATALOG NUMBER	LAMPS			TOTAL	VOLTAGE	MOUNTING	NOTES
		TYPE	#	WATTS	WATTS			
L	PINNACLE MW-WHE-835VHO-8-FL-U-FSD-1-0-W-V	LED	1	88.8	88.8	120	FLUSH	0-10V DIMMER, COORDINATE WITH VENDOR TO ENSURE DIMMING CAPABILITY OF FIXTURE, 8' ADJUSTABLE LINEAR COVE FIXTURE, VISOR PROVIDE WITH ALL REQUIRED MOUNTING HARDWARE
WF6	LITHONIA LIGHTING WF6 LED 27K30K35K 90CRI MW	LED	1	14	14	120	CEILING	CEILING MOUNTED, LED, 120V WAFER,1110 LUMENS 3500K
T	TORK DGLC200A-NC	NA	NA	NA	NA	NA	NA	2 CHANNEL DIGITAL TIMER WITH PHOTO SENSOR
ML4	KENALL MLHA5 48 R MW PP 1 45L35K DCC 1 DV LEL DL	LED	1	49	49	120	WALL	WALL MOUNTED, LED, 120V, VANITY LIGHT, EMERGENCY BACKED UP
WL2	LITHONIA LIGHTING WL2 22L GZ1 LP835	LED	1	21	21	120	CEILING	CEILING MOUNTED, LED, 120V, 2' STRIP LIGHT
WL4	LITHONIA LIGHTING WL4 40L GZ1 LP835 EL14L	LED	1	39.5	39.5	120	CEILING	CEILING MOUNTED, 4' STRIP LIGHT, LED, 120V , EMERGENCY BATTERY BACKED
EM	LITHONIA LIGHTING EU2C HO	LED	1	4	4	120	WALL	WALL MOUNTED, EMERGENCY LIGHT, HIGH OUTPUT EMERGENCY BACKED UP
INV	SIGNFIY ELIS100	N/A	N/A	100	100	120	NA	LED COMPATIBLE, DIMMING EMERGENCY BACKUP
A2	ALW LP3.5SMBWL-S2-HI/80/3500-V01-EXT/F-SB-UNV-N	LED	1	21	21	120	SURFACE/ WALL	WET LOCATION AND OUTDOOR RATED, 2' LED FIXTURE ENSURE APPROPRIATE MOUTING HARDWARE FOR CEILING TYPE
NOTES	FIXTURES WITH HALF FILLED IN CENTER SHALL BE PROVIDED WITH AN EMERGENCY BALLAST, 1100 LUMENS OR THE MAXIMUM AVAILABLE FOR THE FIXTURE.							
	FULL FILLED CENTER IS AN EMERGENCY FIXTURE SUPPLIED BY INVERTER.							

MECHANICAL EQUIPMENT ELECTRICAL SCHEDULE

MARK	ITEM	VOLTAGE/Ø	MCA	LOAD	MEANS OF DISCONNECT*	C/B TRIP (AMPS)	CIRCUIT			SERVING PANEL	NOTES
							Ø	GROUND	CONDUIT		
RCP-1	RECIRCULATION PUMP	120/1	5.4	518.4W	TSM	15	2#12	#12	3/4"C	2P1	
EUH-1	ELECTRIC UNIT HEATER	240/1	3.9	750W	TSM	15	2#12	#12	3/4"C	2P1	
EUH-2	ELECTRIC UNIT HEATER	240/1	3.9	750W	TSM	15	2#12	#12	3/4"C	2P1	
EUH-3	ELECTRIC UNIT HEATER	240/1	3.9	750W	TSM	15	2#12	#12	3/4"C	2P1	
EWH-1	ELECTRIC WATER HEATER	240/1	13	2.5kW	N1 SS	15	2#12	#12	3/4"C	2P1	
NOTES	*N1=NEMA 1, N3R=NEMA 3R, SS=SAFETY SWITCH, FSS=FUSED SAFETY SWITCH, C/B=SERVING C/B, TS=MANUAL TOGGLE SWITCH, TSM=MOTOR RATED TS										
	FOR FUSED SAFETY SWITCHES THE 1ST # IS FUSE SIZE, THE 2ND # IS FRAME SIZE (FOR EXAMPLE: 90/100/3 N1,FSS INDICTAES A 3 POLE 100A FUSED SAFETY SWITCH WITH 90A FUSES)										
	1. DISCONNECT INTEGRAL TO EQUIPMENT BY DIVISION 15.										
	2. PROVIDE FVNR ENCLOSED MAGNETIC MOTOR STARTER NEMA SIZED AS REQUIRED.										
	3. PROVIDE COMBINATION FVNR ENCLOSED MAGNETIC MOTOR STARTER NEMA SIZED AS REQUIRED.										
	4. PROVIDE MOTOR RATED POWER RELAY IN NEMA 1 ENCLOSURE FOR CONTROL OF EQUIPMENT.										
	5. VFD W/INTEGRAL DISCONNECT PROVIDED BY DIVISION 15, CONNECTED BY DIVISION 16.										
	6. PROVIDE AUXILIARY CONTACT IN SAFETY SWITCH. SEE DETAIL.										

PANELBOARD SCHEDULE

MARK: 2MDP

CKT #	LOAD DESCRIPTION	BREAKER P	BREAKER TRIP	PHASE (kVA) A	PHASE (kVA) B	PHASE (kVA) A	PHASE (kVA) B	BREAKER P	BREAKER TRIP	LOAD DESCRIPTION	CKT #
1	2P1	2	100	5.4		-		-	-	-	2
3					5.1		-	-	-	-	4
5	-	-	-	-		-		-	-	-	6
7	-	-	-		-		-	-	-	-	8
9	-	-	-	-		-		-	-	-	10
11	-	-	-		-		-	-	-	-	12
				5.4	5.1						

TOTAL (kVA) ØA 5.4 ØB 5.1 HIGH PHASE (AMPS) 45.1

TOTAL CONNECTED LOAD (kVA) 10.5 TOTAL LOAD (AMPS) 43.9

CREATE A DIRECTORY TO INDICATE INSTALLED LOADS. INDICATE LOAD TYPE (REC, LTG, AHU-1, ETC.) AND RM NOS FOR EVERY BRANCH CIRCUIT.

PANELBOARD SCHEDULE

MARK: PANEL 2P1

CKT #	LOAD DESCRIPTION	BREAKER P	BREAKER TRIP	PHASE (kVA) A	PHASE (kVA) B	PHASE (kVA) A	PHASE (kVA) B	BREAKER TRIP	BREAKER P	LOAD DESCRIPTION	CKT #
1	LIGHTING RM 103, 104, & 105	1	20	0.2		0.5		20	1	LIGHTING RM 100,101,102	2
3	EMERGENCY LIGHTING, INVERTER	1	20		0.1		1.6	20	1	LIGHTING RM 106	4
5	HEAT TRACE STORAGE 104 REC	1	20	1.9		0.7		20	1	REC RM 104 & 105	6
7	REC RM 103	1	20		-		0.2	20	1	REC RM 101	8
9	REC RM 102	1	20	0.2		0.4		20	1	REC RM 100	10
11	REC RM 106	1	20		0.5		0.5	20	1	REC RM 106	12
13	REC RM 106	1	20	0.5		0.4		20	1	REC RM 106	14
15	RCP-1	1	15		0.5		1.3	15	2	EWH-1	16
17	EUH-1	2	15	0.4		1.3					18
19					0.4		0.4	15	1	EUH-2	20
21	EUH-3	2	15	0.4		0.4					22
23					0.4		1.9	20	1	HEAT TRACE STORAGE 105 REC	24
25	HEAT TRACE 100 NORTHERN REC	1	20	1.9		1.9		20	1	HEAT TRACE 100 MIDDLE REC	26
27	HEAT TRACE 100 SOUTHERN REC	1	20		1.9		-	20	1	SPARE	28
29	SPARE	1	20	-		-		20	1	SPARE	30
31	SPARE	1	20		-		-	20	1	SPARE	32
33	SPARE	1	20	-		-		20	1	SPARE	34
35	SPARE	1	20		-		-	20	1	SPARE	36
37	SPARE	1	20	-		-		20	1	SPARE	38
39	SPARE	1	20		-		-	20	1	SPARE	40
				5.5	3.8	5.5	5.8				

TOTAL (kVA) ØA 10.9 ØB 9.6 HIGH PHASE (AMPS) 91.2

TOTAL CONNECTED LOAD (kVA) 20.6 TOTAL LOAD (AMPS) 85.7

CREATE A DIRECTORY TO INDICATE INSTALLED LOADS. INDICATE LOAD TYPE (REC, LTG, AHU-1, ETC.) AND ROOM NUMBERS SERVED FOR EVERY BRANCH CIRCUIT.

*THIS CIRCUIT IS TO USE A GFCI BREAKER.

PANELBOARD INFORMATION SCHEDULE

MARK	ENCLOSURE TYPE	MOUNTING STYLE	VOLTAGE	Ø	WIRE	MAIN BKR	IF MLO, SERVING BKR	SERVICE RATED	kAIC RATING*	Ø BUS RATING (A)	N BUS RATING	FEEDER CONDUCTORS	FEEDER GROUND	FEEDER CONDUIT	NOTES
2MDP	NEMA 3R	PATRIALLY RECESSED	120/240	1	3	200	N/A	YES	10	200	100%	3#3/0	NONE	2 1/2"C	
2P1	NEMA 1	SURFACE	120/240	1	3	MLO	100	NO	10	100	100%	3#1	#6	1 1/2"C	
NOTES															

WHLC | ARCHITECTURE

dell consulting
Andrew W. Maurin 25105
Alabama Certificate Number C-441-66-E
Alabama Professional Engineer #25105
Mobile, Alabama 36609
P 251-510-6015 F 800-352-6209
Dell Consulting project: 22-109

TRANSIT HUB PAVILION

LOXLEY MUNICIPAL PARK
LOXLEY, ALABAMA

ALABAMA LICENSED No. 25105 PROFESSIONAL ENGINEER ANDREW W. MAURIN
5-23-2023

washer hill lipscomb cabaniss
architecture, llc
copyright 2022

70 south section st fairhope, al
t 251.990.6200

21-205
May 23, 2023

LIGHTING FIXTURE SCHEDULE

E3.00

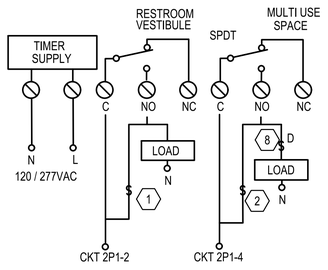

1 WIRING DIAGRAM TORK DGLC200A-NC

NOT TO SCALE

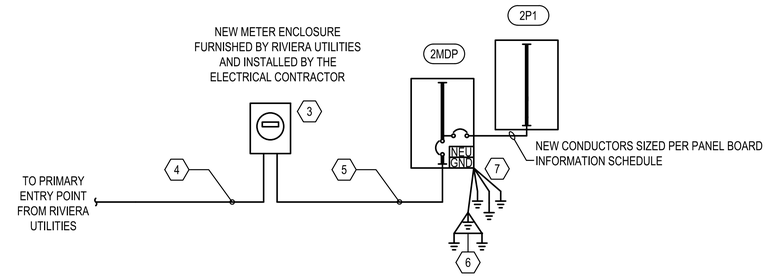

2 SINGLE LINE DIAGRAM

NOT TO SCALE

SHEET NOTES

1. SEE LIGHTING PLAN FOR EXACT LOCATION OF BYPASS SWITCH #1.
2. SEE LIGHTING PLAN FOR EXACT LOCATION OF BYPASS SWITCH #2.
3. NEW RIVIERA UTILITIES POWER METER. THE ELECTRICAL CONTRACTOR IS TO COORDINATE WITH RIVIERA UTILITIES TO PROVIDE AND INSTALL ALL CONDUIT, WIRE, CONCRETE FOR PADS, ETC. TO COMPLETE THE SERVICES AND METERING ON THE SITE.
4. (1)4" SCHEDULE 40 PVC CONDUIT AT 36" BELOW FINISHED GRADE MINIMUM WITH MULE TAPE AND CAPS. TO BE USED FOR SERVICE CONNECTION.
5. CONDUIT AND WIRE AS PER PANELBOARD INFORMATION SCHEDULE.
6. #2/0 TINNED STRANDED BARE COPPER CONDUCTOR TO THREE 20' GROUND RODS IN AN EQUILATERAL ARRANGEMENT.
7. #2/0 BONDS TO FOUNDATION REBAR, BUILDING WATER SERVICE AND BUILDING STEEL.
8. SEE LIGHTING PLAN FOR EXACT LOCATION OF DIMMER SWITCH.

WHLC | ARCHITECTURE

dell consulting
MEP Engineering
Andrew W. Maurin 25105
Alabama Certificate Number C-4146-E
813 Downtown Blvd, Suite D
Mobile, Alabama 36609
P: 251-316-0015 F: 850-332-6629
Dell Consulting project: 22-109

TRANSIT HUB PAVILION

LOXLEY MUNICIPAL PARK
LOXLEY, ALABAMA



washer hill lipscomb cabaniss
architecture, llc
copyright 2022

70 south section st fairhope, al
t 251.990.6200

21-205

May 23, 2023

ELECTRICAL DETAILS
& SINGLE LINE DIAGRAM

E4.00

PLUMBING FIXTURE CONNECTION SCHEDULE

MARK #	FIXTURE TYPE	CONNECTIONS				REMARKS	NOTES
		WASTE	VENT	CW	HW		
P-1	FLUSH VALVE WATER CLOSET	3"	2"	1"	-	VIT. CHINA, WHITE, 15" HIGH ELONGATED BOWL, FLOOR MOUNTED FLUSH VALVE TYPE, 1.6 GALLONS PER FLUSH. EQUAL TO KOHLER K96053. PROVIDE WITH FLUSH VALVE SLOAN REGAL AND WHITE OPEN FRONT SEAT WITHOUT COVER.	
P-1A	FLUSH VALVE WATER CLOSET (HC)	3"	2"	1"	-	VIT. CHINA, WHITE, 16-5/8" HIGH ELONGATED BOWL, FLOOR MOUNTED FLUSH VALVE TYPE, 1.6 GALLONS PER FLUSH. EQUAL TO KOHLER K96057. PROVIDE WITH SLOAN REGAL FLUSH VALVE AND WHITE OPEN FRONT SEAT WITHOUT COVER. INSTALL PER ADA REQUIREMENTS.	(1)
P-2	URINAL (HC)	3"	2"	3/4"	-	VIT. CHINA, WHITE WALL HUNG URINAL. EQUAL TO KOHLER MODEL K-4991-ET. PROVIDE WITH 0.5 GALLON PER FLUSH VALVE EQUAL TO SLOAN REGAL AND FLOOR MOUNTED CARRIER. INSTALL PER ADA REQUIREMENT.	(1)
P-3	LAVATORY (HC)	1-1/2"	2"	1/2"	1/2"	VITREOUS CHINA, 19-3/4"x15-5/8" RECTANGULAR UNDERMOUNT BOWL EQUAL TO KOHLER K-2330. PROVIDE WITH SINGLE LEVER FAUCET EQUAL TO DELTA 520 SERIES WITH GRID WASTE. PROVIDE WITH 17 GA P-TRAP, FLEXIBLE SUPPLIES, STOPS, AND ASSE 1017 TEMPERATURE LIMITING MIXING VALVE. INSTALL PER ADA REQUIREMENTS. COORDINATE INSTALLATION WITH GENERAL CONTRACTOR.	(1)
P-4	JANITOR'S SINK	3"	2"	1/2"	1/2"	24x24x10 FLOOR MOUNTED JANITOR'S SINK WITH WALL MOUNTED FAUCET EQUAL TO FIAT MSB2424. PROVIDE WITH STAINLESS STEEL WALL GUARD, STAINLESS STEEL DRAIN GRATE, AND MOP HANGER.	
P-5	WATER FOUNTAIN (HC)	2"	2"	1/2"	-	WALL HUNG, DUAL HEIGHT, FREEZE RESISTANT, WATER FOUNTAIN EQUAL TO ELKAY EDFP217FPK. PROVIDE WITH FLOOR MOUNTED CARRIER, FLEXIBLE SUPPLY, P-TRAP, AND STOP.	(1)
FD	FLOOR DRAIN	3"	2"	-	-	ZURN ZN415 FLOOR DRAIN WITH TRAP SEAL EQUAL TO GREEN DRAIN. COORDINATE FLOOR SLOPE TO DRAIN WITH GENERAL CONTRACTOR.	
MV-1	MIXING VALVE	-	-	3/4"	3/4"	MIXING VALVE EQUAL TO SYMMONS 5-225-CK WITH INTERNAL CHECK VALVES. MINIMUM FLOW 0.5 GMP, MAXIMUM FLOW 5.5 GPM @ 10.0 PSI DROP. SET FOR 110°F.	
FPHB	FREEZE PROOF HOSE BIBB	-	-	3/4"	-	FREEZE PROOF HOSE BIBB WITH VACUUM BREAKER. PROVIDE AS RECESSED BOX TYPE WITH HINGED COVER.	

(1) HANDICAPPED FIXTURES SHALL BE INSTALLED PER THE LATEST REQUIREMENTS OF ADA.

ELECTRIC WATER HEATER SCHEDULE

MARK EWH	TANK CAPACITY (GALLONS)	MINIMUM EFFICIENCY	TEMPERATURE SETPOINT (F)	HEATING CAPACITY (KW)	VOLTS	Hz	PHASE	RECIRCULATED SYSTEM	NOTES
1	20	0.9	120	2.5	240	60	1	YES	1, 2, 3, 4
NOTES									
1	COORDINATE ALL ELECTRICAL REQUIREMENTS WITH THE ELECTRICAL CONTRACTOR.								
2	PROVIDE WITH EXPANSION TANK, HEAT TRAPS ON CONNECTIONS, T&P RELIEF VALVE, AUXILIARY DRAIN PAN, ISOLATION VALVES WITH DI-ELECTRIC UNIONS ON HOT AND COLD CONNECTIONS.								
3	PROVIDE WITH MASTER MIXING VALVE AND RECIRCULATION PUMP. SEE DETAIL AND MANUFACTURERTS REQUIREMENTS FOR SPECIFIC PIPING REQUIREMENTS.								
4	BASIS OF DESIGN IS RHEEM PROE20. ACCEPTABLE ALTERNATE MANUFACTURER IS BRADFORD WHITE. SUBMIT ALTERNATIVES FOR APPROVAL A MINIMUM OF 10 DAYS PRIOR TO BID DATE.								

HOT WATER RECIRCULATION PUMP SCHEDULE

MARK RCP	CONTROL WITH	CAPACITY (GPM)	TOTAL HEAD (FT)	PUMP CONSTRUCTION	MOTOR (HP)	VOLTS	Hz	PHASE	NOTES
1	AQUASTAT	5	20	STAINLESS STEEL	1/5	120	60	1	1, 2, 3, 4
NOTES									
1	COORDINATE ALL ELECTRICAL REQUIREMENTS WITH THE ELECTRICAL CONTRACTOR.								
2	PROVIDE WITH AQUASTAT WITH A TEMPERATURE SETPOINT OF 110°F.								
3	PROVIDE WITH 24 HOUR TIME CLOCK. PUMP SHALL OPERATE DURING OCCUPIED HOURS, ELSE IT SHALL BE OFF.								
4	PUMP SHALL BE SUITABLE FOR POTABLE WATER USE.								

Smith Mechanical
Consulting & Design
ALABAMA CERTIFICATE OF AUTHORIZATION: CA-3717 E
7150 CHARLANDA CT.
MONTGOMERY, AL 36695
(251) 402-1364
ROGER J. SMITH, PE 24744

GENERAL PLUMBING NOTES

1. THE CONTRACTOR SHALL EXECUTE ALL WORK SO THAT IT PROCEEDS WITH A MINIMUM INTERFERENCE WITH OTHER TRADES.
2. VERIFY EXACT PLUMBING FIXTURE ROUGH-IN AND FINAL HVAC EQUIPMENT REQUIREMENTS IN THE FIELD.
3. DRAIN, WASTE, AND VENT PIPING AND FITTINGS SHALL BE SCHEDULE 40 POLY VINYL CHLORIDE (PVC) SYSTEM "ASTM D 2665". NO FOAM CORE SHALL BE USED.
4. DOMESTIC WATER PIPING SHALL BE ASTM B 88, TYPE K, WITH ANSI B16.18 OR ANSI B16.22 SOLDER JOINT FITTINGS USING SILVER SOLDER AND FLUX CONTAINING NOT MORE THAN 0.2 PERCENT LEAD; OR WITH ANSI B16.26 FLARED JOINT FITTINGS. ASTM B 88, TYPE L MAY BE PROVIDED FOR ABOVEGROUND PIPING. SLEEVE SERVICE ENTRANCE AT SLAB. SEAL AROUND PIPING WATER PROOF. AT CONTRACTOR'S OPTION, UPANOR PEX PIPING IS ALLOWABLE WITH COMPOSITE FITTINGS.
5. THE CONTRACTOR SHALL BE RESPONSIBLE FOR ALL FINAL CONNECTIONS TO PLUMBING FIXTURES. THIS RESPONSIBILITY INCLUDES, BUT IS NOT LIMITED TO, FURNISHING AND INSTALLING ALL TRAPS, DRAINS, AND SUPPLIES WITH STOPS. FURNISH AND INSTALL PLUMBING FIXTURES INDICATED OR SPECIFIED, COMPLETE WITH ALL EQUIPMENT, FITTINGS, TRIM AND ACCESSORIES INDICATED OR SPECIFIED. EXPOSED WATER PIPING TO FIXTURES SHALL BE CHROME-PLATED BRASS, IPS. ADJUST WATER FLOW THROUGH ALL FIXTURES TO PROVIDE PROPER FLUSHING ACTION WITH THE LEAST AMOUNT OF WATER.
6. COORDINATE ROUTING OF WATER SUPPLY, WASTE, AND VENT PIPING WITH OTHER TRADES.
7. THE PLUMBING CONTRACTOR SHALL COORDINATE WITH THE GENERAL CONTRACTOR AND OTHER TRADES ALL REQUIRED OPENINGS AND EXCAVATIONS.
8. ALL ITEMS PROJECTING THROUGH THE ROOF SHALL BE FLASHED A MINIMUM OF 12" ABOVE THE ROOF. ALL VENTS SHALL BE A MINIMUM OF 10 FEET FROM ANY OUTSIDE AIR INTAKE.
9. FLOOR CLEANOUTS SHALL BE ADJUSTABLE HEIGHT POLISHED BRONZE, NICKEL BRONZE WITH "CO" CAST IN THE FLOOR PLATE.
10. PROVIDE STOPS AND WATER HAMMER ARRESTORS IN ACCORDANCE WITH PDI AND ASSE 1010. AN ACCESS PANEL MUST BE INSTALLED IF WATER HAMMER ARRESTER IS LOCATED INSIDE A WALL OR ABOVE A HARD CEILING. COORDINATE OPENINGS WITH ARCHITECT.
11. PROVIDE DIELECTRIC UNIONS AT ALL DISSIMILAR METAL CONNECTIONS.
12. INSULATE ALL WATER PIPING. DOMESTIC WATER PIPE NOT EXPOSED TO VIEW SHALL BE INSULATED WITH 1" THICK GLASS FIBER WITH FACTORY APPLIED UNIVERSAL JACKET. DENSITY SHALL BE 4 POUNDS PER CUBIC FOOT. FITTINGS SHALL BE INSULATED ACCORDING TO MANUFACTURER'S RECOMMENDATIONS. INSULATION VAPOR BARRIER SHALL BE LAPPED AND CEMENTED IN ACCORDANCE WITH MANUFACTURER'S RECOMMENDATIONS. DOMESTIC WATER PIPE EXPOSED TO VIEW SHALL BE INSULATED SAME AS WHERE NOT EXPOSED TO VIEW, EXCEPT IT SHALL BE FINISHED WITH A SIZED UNIVERSAL JACKET SUITABLE FOR PAINTING. FITTING SHALL BE MADE OF "QUICKSET" CEMENT MOLDED TO FIT AND COVERED WITH 8 OZ. CANVAS AND FINISHED WITH WHITE VAPOR BARRIER CEMENT, AND HAVE PLASTIC MOLDED FITTING COVERS. PIPING TURNED DOWN INSIDE MASONRY WALLS SHALL BE INSULATED CONTINUOUSLY. INSULATED PIPING INSIDE MASONRY WALLS SHALL BE PROTECTED FROM MECHANICAL DAMAGE WITH PVC JACKETING. INSULATE DOMESTIC WATER AND WASTE PIPING UNDER HANDICAP LAVATORIES AND SINKS USING "LAVGUARD2 E-Z SERIES" MOLDED VINYL PIPING COVERS. COVER ALL PIPING, FITTING, VALVES, AND TRAPS EXPOSED TO VIEW.
13. ROUTE ALL PIPING AS TO CAUSE MINIMAL INTERFERENCE FOR MAINTENANCE OF ALL EQUIPMENT. UNLESS OTHERWISE NOTED, ALL DOMESTIC WATER PIPING SHALL BE ROUTED WITHIN CHASE SPACE. PIPING BELOW SLAB SHALL BE WITHOUT JOINTS AND TEES. PIPING PASSING THRU WALLS EXTENDING TO BOTTOM OF STRUCTURE SHALL BE SLEEVED AND SEALED. ALL DOMESTIC WATER PIPING ROUTED EXPOSED BELOW 6'-8" ABOVE FINISH FLOOR SHALL BE PROVIDED WITH A PVC JACKET TO PREVENT DAMAGE TO THE PIPE.
14. PROVIDE SHUTOFF VALVE TO EACH SILLCOCK WITH VALVE IDENTIFICATION AS REQUIRED BY CODE.
15. BEFORE FINAL ACCEPTANCE OF THE WORK, TEST EACH SYSTEM AS IN SERVICE TO DEMONSTRATE COMPLIANCE WITH 2018 INTERNATIONAL PLUMBING CODE AND LOCAL CODE REQUIREMENTS. ONCE TEST ARE IN COMPLIANCE WITH CONTRACT REQUIREMENTS DISINFECT WATER SYSTEM IN ACCORDANCE WITH AWWA C651.
16. CONTRACTOR TO VERIFY ALL LOCATIONS OF ROOF PENETRATIONS WITH ARCHITECTURAL DRAWINGS.
17. PIPE HANGERS AND SUPPORTS SHALL BE MSS SP-58 AND MSS SP-69, TYPE 1 OR 6, OF THE ADJUSTABLE TYPE, EXCEPT AS INDICATED OTHERWISE. ATTACHMENTS TO STEEL W OR S BEAMS SHALL BE WITH TYPE 21, 28, 29, OR 30 CLAMPS. ATTACHMENTS TO STEEL ANGLES AND CHANNELS (WITH WEB VERTICAL) SHALL BE WITH TYPE 20 CLAMP WITH A BEAM CLAMP CHANNEL ADAPTER. ATTACHMENTS TO STEEL CHANNEL (WITH WEB HORIZONTAL) SHALL BE WITH DRILLED HOLE ON CENTERLINE AND DOUBLE NUT AND WASHER. ATTACHMENTS TO CONCRETE SHALL BE WITH TYPE 18 INSERT OR A DRILLED HOLE WITH EXPANSION ANCHOR. HANGER RODS AND ATTACHMENTS SHALL BE FULL SIZE OF THE HANGER-THREADED DIAMETER. PROVIDE TYPE 40 INSULATION PROTECTION SHIELDS FOR INSULATED PIPING. PROVIDE STEEL SUPPORT RODS. PROVIDE NONMETALLIC, HAIR FELT, OR PLASTIC PIPING ISOLATORS BETWEEN COPPER TUBING AND THE HANGERS.
18. LABEL ALL WATER SERVICE VALVES IN ACCORDANCE WITH APPLICABLE CODES
19. COORDINATE EXACT FLOOR DRAIN LOCATIONS ARCHITECTURAL DRAWINGS. SLOPE ENTIRE ROOM TO DRAINS.
20. ALL TRAP PRIMER VALVES NOT LOCATED IN NORMALLY UNOCCUPIED SPACES SHALL BE MOUNTED ABOVE THE CEILING AND PROVIDED WITH A LABEL ON THE CEILING GRID TO INDICATE THE TRAP PRIMER LOCATION. NO TRAP PRIMERS SHALL BE INSTALLED EXPOSED IN NORMALLY OCCUPIED SPACES.
21. ROUTE SANITARY PIPING AS HIGH AS POSSIBLE TO AVOID CONFLICT WITH FOOTERS AND TO MAINTAIN ABILITY TO GRAVITY DISCHARGE INTO CITY SEWER. IT IS THE CONTRACTORS RESPONSIBILITY TO FIELD VERIFY THE EXACT LOCATION OF THE NEW SANITARY SEWER LATERAL AND ENSURE WASTE PIPING IS INSTALLED TO PROVIDE A GRAVITY DISCHARGE INTO THE CITY MAIN.
22. THE CONTRACTOR IS RESPONSIBLE FOR PAYING ALL ASSOCIATED WASTE AND WATER TAP FEES ASSOCIATED WITH THIS PROJECT. ALL FEES ARE TO BE INCLUDED IN THE CONSTRUCTION COST.
23. ALL WORK INSTALLED SHALL MEET THE REQUIREMENTS OF THE LOCAL AUTHORITY HAVING JURISDICTION, THE 2018 INTERNATIONAL PLUMBING CODE, AND THE 2018 INTERNATIONAL ENERGY CONSERVATION CODE.

WHLC | ARCHITECTURE

TRANSIT HUB PAVILION

LOXLEY MUNICIPAL PARK
LOXLEY, ALABAMA

ALABAMA LICENSED No. 24744 PROFESSIONAL ENGINEER ROGER J. SMITH
5/23/2023

washer hill lipscomb cabaniss architecture, llc
copyright 2022

70 south section st fairhope, al
t 251.990.6200

21-205
MAY 23, 2023

PLUMBING SCHEDULES AND NOTES

P1.00

Smith Mechanical
Consulting & Design
ALABAMA CERTIFICATE OF AUTHORIZATION: CA-3717 E
7150 CHARLANDA CT.
MONTGOMERY, AL 36695
(251) 422-1364
ROGER J. SMITH, PE 24744

SHEET NOTES

1. 2" CW SERVICE UP INSIDE WALL, PROVIDE ISOLATION SHUT OFF VALVE IN RISE 24" AFF. PROVIDE WALL ACCESS DOOR ADJACENT TO VALVE.
2. 3/4" CW DOWN INSIDE WALL FOR CONNECTION TO FREEZE PROOF HOSE BIBB. PROVIDE ISOLATION SHUT OFF VALVE ABOVE CEILING ADJACENT TO TURN DOWN.
3. 1" CW DOWN INSIDE WALL FOR CONNECTION TO WATER CLOSET.
4. 3/4" CW DOWN INSIDE WALL FOR CONNECTION TO URINAL.
5. 1/2" CW/HW/HWR DOWN INSIDE WALL FOR CONNECTION TO LAVATORY. SEE DETAIL FOR HWR CONNECTION REQUIREMENTS.
6. 1/2" CW DOWN INSIDE WALL FOR CONNECTION TO WATER COOLER.
7. 1/2" HW/CW DOWN INSIDE WALL FOR CONNECTION TO JANITOR'S SINK.
8. ISOLATION SHUT OFF VALVE ABOVE THE CEILING. CONTRACTOR SHALL PROVIDE WITH 12"x12" ACCESS PANEL ADJACENT TO VALVE.
9. CONTRACTOR SHALL PROVIDE PIPING CROSSING VESTIBULE AND UNCONDITIONED SPACES WITH HEAT TRACE. COORDINATE ELECTRICAL REQUIREMENTS WITH THE ELECTRICAL CONTRACTOR. HEAT TRACE SHALL BE EQUAL TO CHROMALOX SRF SERIES, 8 WATTS/FT. HEAT TRACE SHALL BE INSTALLED PER SPECIFIC MANUFACTURER'S RECOMMENDATIONS TO PREVENT PIPE FREEZING.

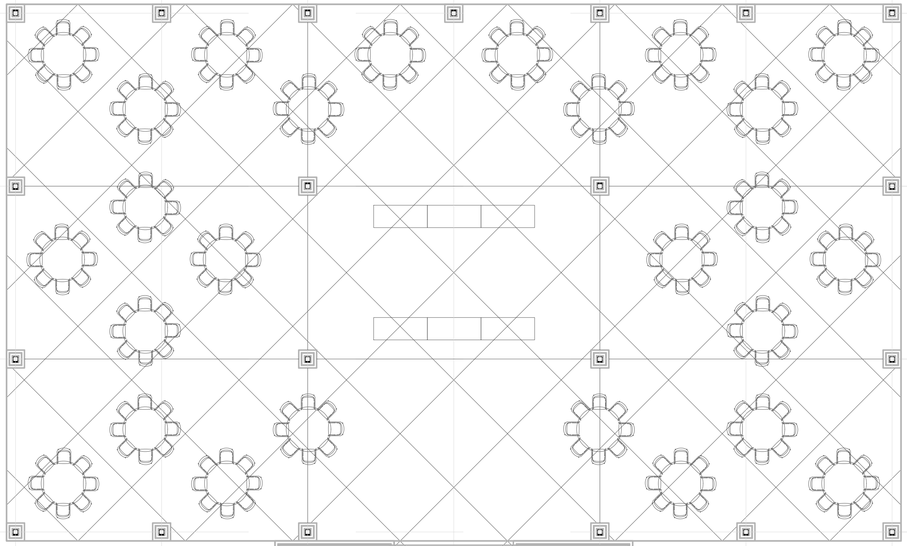

1 SANITARY WASTE PLAN

8' 0' 8' 16'
SCALE: 1/8"=1'-0"

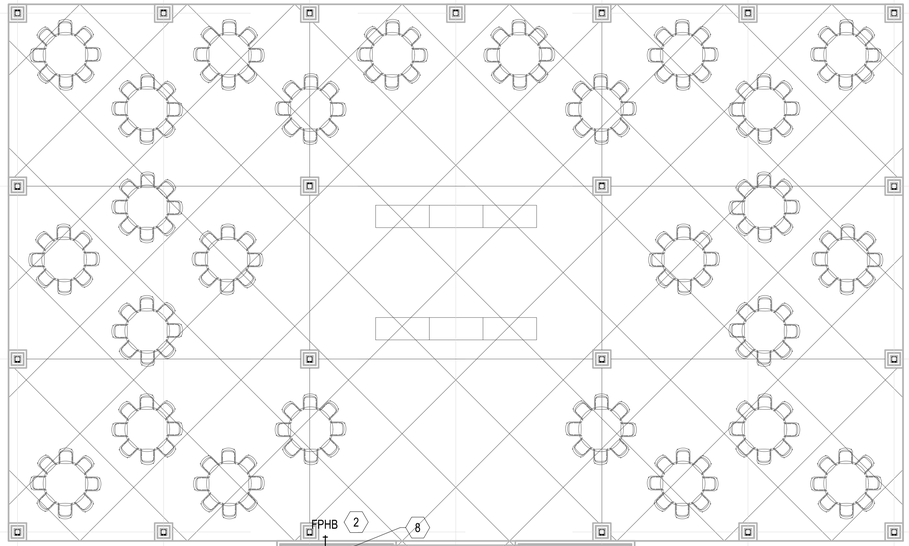

2 PLUMBING PLAN

8' 0' 8' 16'
SCALE: 1/8"=1'-0"

WHLC | ARCHITECTURE

TRANSIT HUB PAVILION

LOXLEY MUNICIPAL PARK
LOXLEY, ALABAMA

ALABAMA LICENSED No. 24744 PROFESSIONAL ENGINEER ROGER J. SMITH
5/23/2023

washer hill lipscomb cabaniss
architecture, llc
copyright 2022
70 south section st fairhope, al
t 251.990.6200

21-205
MAY 23, 2023

PLUMBING PLAN

P2.00

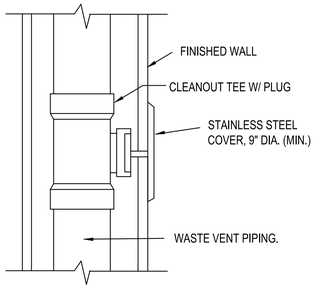

1 WALL CLEANOUT DETAIL

NOT TO SCALE

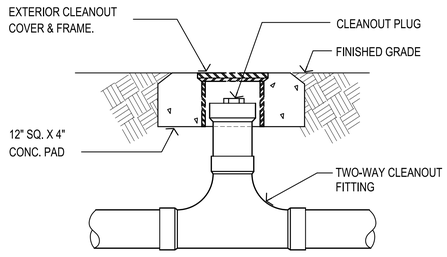

2 TWO-WAY CLEANOUT DETAIL

NOT TO SCALE

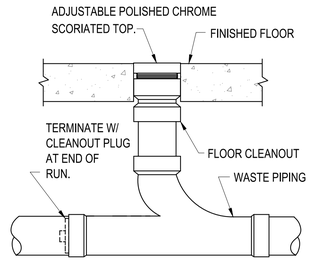

3 FLOOR CLEANOUT DETAIL

NOT TO SCALE

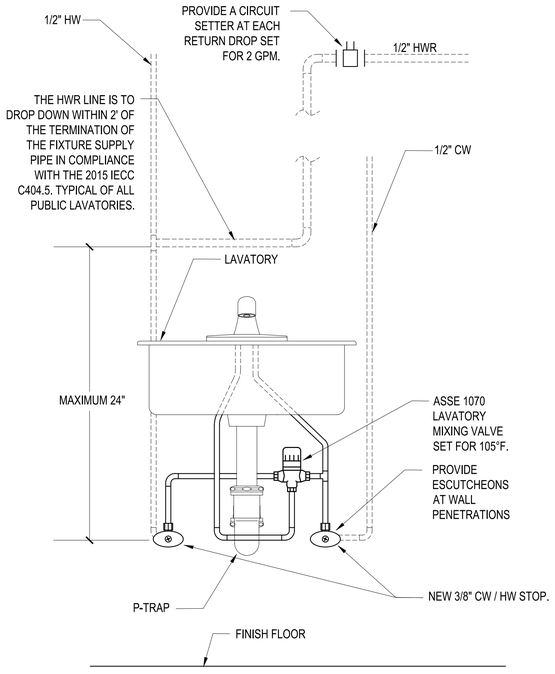

4 LAVATORY MIXING VALVE DETAIL

NOT TO SCALE

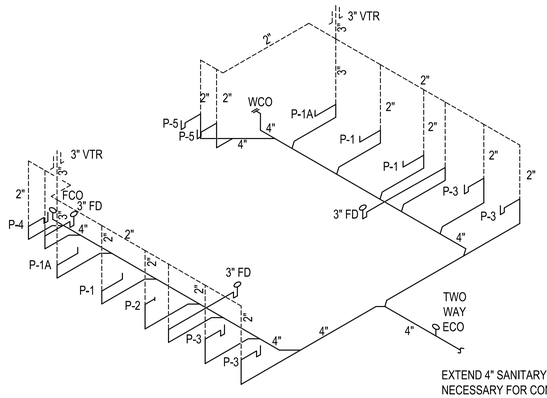

EXTEND 4" SANITARY WASTE AS NECESSARY FOR CONNECTION TO CITY MAIN. REFERENCE CIVIL PLANS FOR CONTINUATION.

6 SANITARY WASTE RISER

NOT TO SCALE

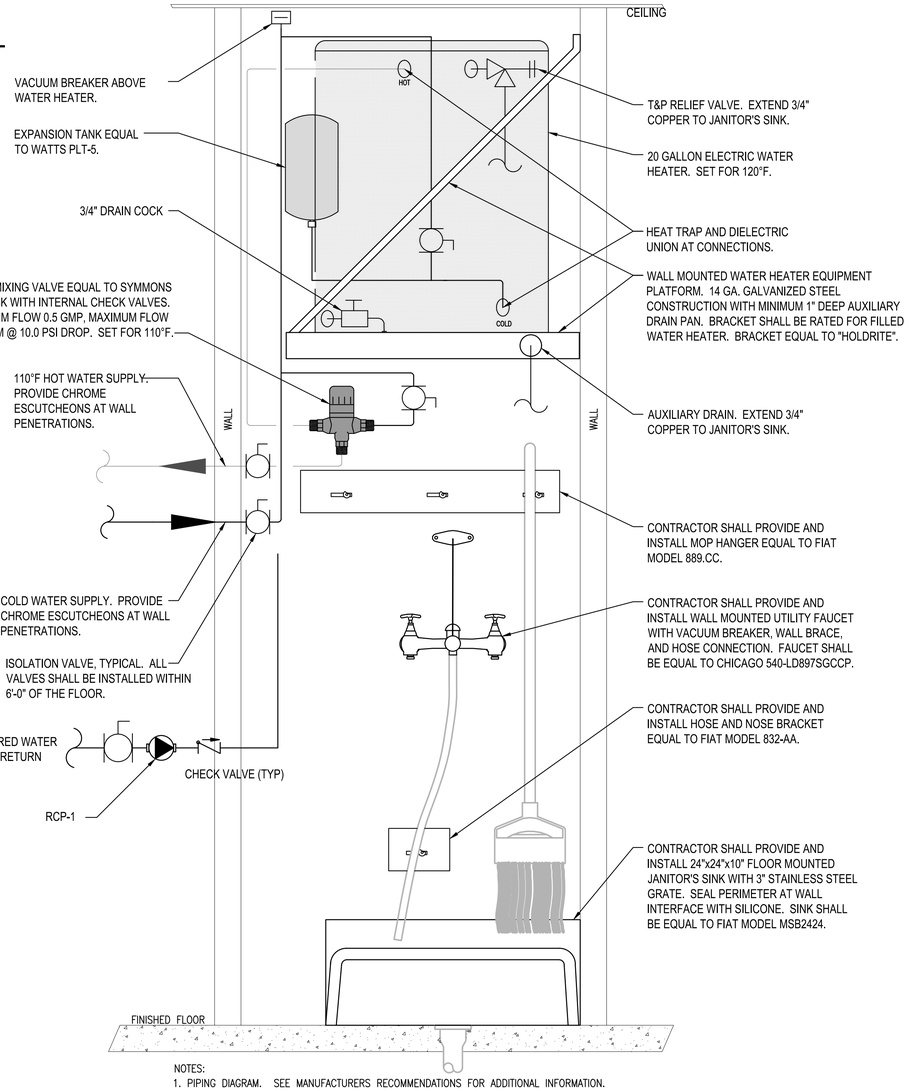

NOTES:

1. PIPING DIAGRAM. SEE MANUFACTURERS RECOMMENDATIONS FOR ADDITIONAL INFORMATION.
2. THE TEMPERATURE AND PRESSURE RELIEF VALVE SETTING SHALL NOT EXCEED PRESSURE RATING OF ANY ANY COMPONENT IN THE SYSTEM.
3. PROVIDE WITH ISOLATION VALVES AS INDICATED.
4. PROVIDE WITH HEAT TRAPS ON INLET AND OUTLET.

5 WATER HEATER INSTALLATION DETAIL (2015 IECC)

NOT TO SCALE

Smith Mechanical
Consulting & Design
ALABAMA CERTIFICATE OF AUTHORIZATION: CA-3717 E
7150 CHARLANDA CT.
MONTGOMERY, AL 36695
(251) 402 - 3644
ROGER J. SMITH, PE 24744

WHLC | ARCHITECTURE

TRANSIT HUB PAVILION

LOXLEY MUNICIPAL PARK
LOXLEY, ALABAMA

ALABAMA LICENSED No. 24744 PROFESSIONAL ENGINEER ROGER J. SMITH
5/23/2023

washer hill lipscomb cabaniss architecture, llc
copyright 2022

70 south section st fairhope, al
t 251.990.6200

21-205
MAY 23, 2023

PLUMBING DETAILS

P3.00

FAN SCHEDULE

MARK FAN	AIR FLOW (CFM)	STATIC PRESSURE (in of H20)	DRIVE TYPE	FAN TYPE	FAN SERVICE	INTERLOCK WITH	MAXIMUM RPM	MAXIMUM SONES	MOTOR	ELECTRICAL DATA			NOTES
									HP/WATTS	VOLTS	Hz	PHASE	
EF-1	210	0.25	DIRECT	CEILING	TOILET ROOM	ROOM LIGHTS	1,400	3.0	135 WATTS	120	60	1	1,2
EF-2	210	0.25	DIRECT	CEILING	TOILET ROOM	ROOM LIGHTS	1,400	3.0	135 WATTS	120	60	1	1,2

NOTES	
1	COORDINATE ALL ELECTRICAL REQUIREMENTS WITH THE ELECTRICAL CONTRACTOR.
2	PROVIDE FAN WITH SOLID STATE SPEED CONTROL. DISCHARGE THROUGH ROUND GABLE LOUVER.

ELECTRIC UNIT HEATER SCHEDULE

HEATER MARK	CFM TOTAL	TYPE DRIVE	MOUNTING	CONTROL WITH	HEATING CAPACITY	MAXIMUM UNIT AMPS	ELECTRICAL DATA			HEATER SERVICE	REMARKS
							VOLTS	Hz	PHASE		
EUH-1	100	DIRECT	HORIZONTAL RECESSED	INTEGRAL T-STAT	750 W	8.0	240	60	1	FREEZE PROTECTION	(1)(2)(3)(4)
EUH-2	100	DIRECT	HORIZONTAL RECESSED	INTEGRAL T-STAT	750 W	8.0	240	60	1	FREEZE PROTECTION	(1)(2)(3)(4)
EUH-3	100	DIRECT	HORIZONTAL RECESSED	INTEGRAL T-STAT	750 W	8.0	240	60	1	FREEZE PROTECTION	(1)(2)(3)(4)

(1) PROVIDE WITH FAN DELAY SWITCH, POWDER COATED EPOXY FINISH, AND INTEGRAL THERMOSTAT. SET FOR HEATER TO ENERGIZE AT TEMPERATURES BELOW 45°F.

(2) COORDINATE ALL ELECTRICAL REQUIREMENTS WITH THE ELECTRICAL CONTRACTOR.

(3) BASIS OF DESIGN IS MARKEL 3000 SERIES. PROVIDE WITH RECESSED MOUNTING BRACKET AS NECESSARY.

(4) UNIT HEATER IS CAPABLE OF MULTIPLE WATTAGE SELECTIONS. INDICATED AMPERAGE IS MAXIMUM POTENTIAL CONNECTED AMPERAGE. SET HEATER CAPACITY FOR 750 WATTS.

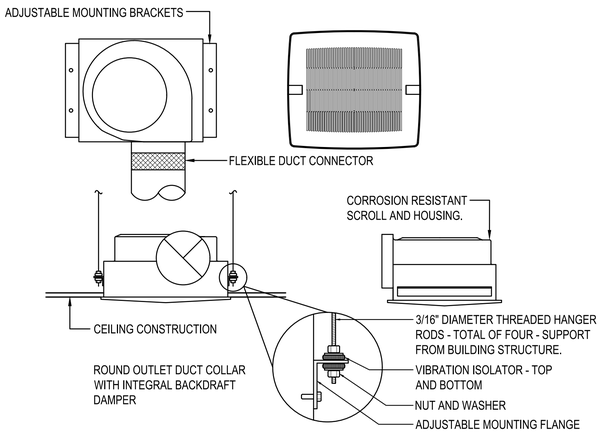

1 CEILING EXHAUST FAN DETAIL
NOT TO SCALE

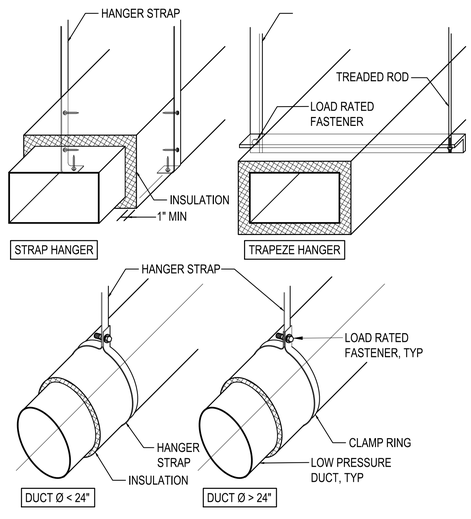

2 DUCT HANGER DETAIL
NOT TO SCALE

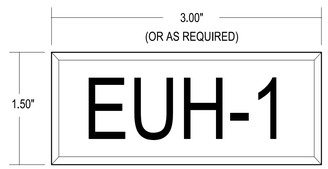

ENGRAVED PLASTIC TAG WITH 1" HIGH WHITE LETTERS ON BLACK BACKGROUND. TAG SHALL HAVE ALL EDGES BEVELED AND SMOOTH. SECURE TAG WITH PERMANENT, WATERPROOF DOUBLE SIDED TAG TAPE AT VISIBLE LOCATION ON MECHANICAL EQUIPMENT. LABEL ALL INDOOR AND OUTDOOR UNITS WITH NOTATION SHOWN ON PLANS.

3 TYPICAL ENGRAVED TAG DETAIL
NOT TO SCALE

HVAC GENERAL NOTES:

1. INSTALL ALL WORK IN COMPLIANCE WITH THE LOCAL AUTHORITY HAVING JURISDICTION, THE 2018 INTERNATIONAL MECHANICAL CODE, AND THE 2018 INTERNATIONAL ENERGY CONSERVATION CODE.
2. COORDINATE ALL ELECTRICAL REQUIREMENTS WITH THE ELECTRICAL CONTRACTOR PRIOR TO BEGINNING ANY WORK.
3. DUCT CONSTRUCTION SHALL BE PER THE LATEST REQUIREMENTS OF NFPA 90A AND 90B, SMACNA AND ASHRAE AND SHALL MEET OR EXCEED THEIR REQUIREMENTS FOR SUPPORT AND REINFORCEMENT.
4. EQUIPMENT PROVIDED AND INSTALLED ON THIS PROJECT SHALL MEET OR EXCEED THE MINIMUM EFFICIENCY REQUIREMENTS INDICATED IN THE SCHEDULE.
5. UNLESS INDICATED OTHERWISE, DUCT CONSTRUCTION SHALL BE G-90 GALVANIZED SHEET METAL. DUCT SEALING SHALL BE CLASS "A", ALL JOINTS, SEAMS, AND PENETRATIONS SHALL BE BRUSHED WITH 2 COATS OF WATER BASED MASTIC. THE DUCT SEAL SHALL MEET OR EXCEED PRESSURE CLASS 2".
6. THE MECHANICAL CONTRACTOR SHALL COORDINATE WITH THE GENERAL CONTRACTOR AND OTHER TRADES ALL REQUIRED OPENINGS IN WALLS, FOUNDATIONS, FLOORS, AND ROOFS. CONTRACTOR SHALL INSTALL LOUVERS PER MANUFACTURERS RECOMMENDATIONS AND DETAILS INDICATED ON THE ARCHITECTURAL PLANS.
7. THE MECHANICAL CONTRACTOR SHALL VERIFY ALL MECHANICAL EQUIPMENT LOCATIONS AND BE RESPONSIBLE FOR ALL RELATED CLEARANCES IN THE FIELD. PROVIDE CLEARANCE IN FRONT OF ALL ELECTRICAL PANELS PER NATIONAL ELECTRIC CODE REQUIREMENTS. DUCT SHALL NOT ROUTE OVER ELECTRICAL PANELS.
15. DUCT SHALL BE FIELD MEASURED PRIOR TO INSTALLATION TO ENSURE PROPER FIT WITHIN STRUCTURAL MEMBERS. DUCT SHALL BE OFFSET, OR TRANSITIONED AS NECESSARY TO ACCOMMODATE STRUCTURAL MEMBERS. DUCT SHALL NOT BE PURCHASED PREFABRICATED FROM THESE DRAWINGS. ANY DUCT PURCHASED PREFABRICATED FROM A DUCT VENDOR SHALL BE DONE FROM CONTRACTOR PROVIDED, FIELD MEASURED SHOP DRAWINGS THAT HAVE BEEN SUBMITTED TO THE ENGINEER FOR PRIOR APPROVAL. NO EXCEPTIONS.
16. OFFSET AND TRANSITION DUCT AS NECESSARY TO AVOID STRUCTURAL MEMBERS OR EQUIPMENT CONNECTION SIZES. PROVIDE FLEXIBLE DUCT CONNECTORS ON ALL DUCT CONNECTION TO MOTORIZED EQUIPMENT.

Smith Mechanical
Consulting & Design
ALABAMA CERTIFICATE OF AUTHORIZATION: CA-3717 E
7150 CHARLANDA CT.
MONTGOMERY, AL 36695
(251) 402 - 3644
ROGER J. SMITH, PE 24744

WHLC | ARCHITECTURE

TRANSIT HUB PAVILION

LOXLEY MUNICIPAL PARK
LOXLEY, ALABAMA

ALABAMA LICENSED No. 24744 PROFESSIONAL ENGINEER ROGER J. SMITH
5/23/2023

washer hill lipscomb cabaniss architecture, llc

copyright 2022

70 south section st fairhope, al
t 251.990.6200

21-205
MAY 23, 2023

HVAC SCHEDULES, DETAILS, AND NOTES

M1.00

SHEET NOTES

1. CEILING MOUNTED EXHAUST FAN. EXTEND EXHAUST DUCT THROUGH ATTIC FOR DISCHARGE THROUGH GABLE LOUVER. FIELD ROUTE DUCT THROUGH ATTIC AS NECESSARY TO AVOID CONFLICTS STRUCTURAL MEMBERS. BLANK OFF UNUSED PORTIONS OF LOUVER.
2. CEILING TYPE UNIT HEATER SUSPENDED FROM STRUCTURE ABOVE FOR FREEZE PROTECTION. COORDINATE INSTALLATION WITH OTHER TRADES. PROVIDE WITH RECESSED INSTALLATION BOX.
3. GABLE EXHAUST LOUVER TO BE SPECIFIED BY THE ARCHITECT. EXTEND TWO 10"Ø EXHAUST DUCTS UP FROM CEILING EXHAUST FANS FOR TERMINATION AT LOUVER. BLANK OFF ANY UNUSED PORTIONS OF THE LOUVER.
4. TURN DUCT UP TO LOUVER ELEVATION. CONTINUE FOR CONNECTION TO PLENUM BOX BEHIND LOUVER.

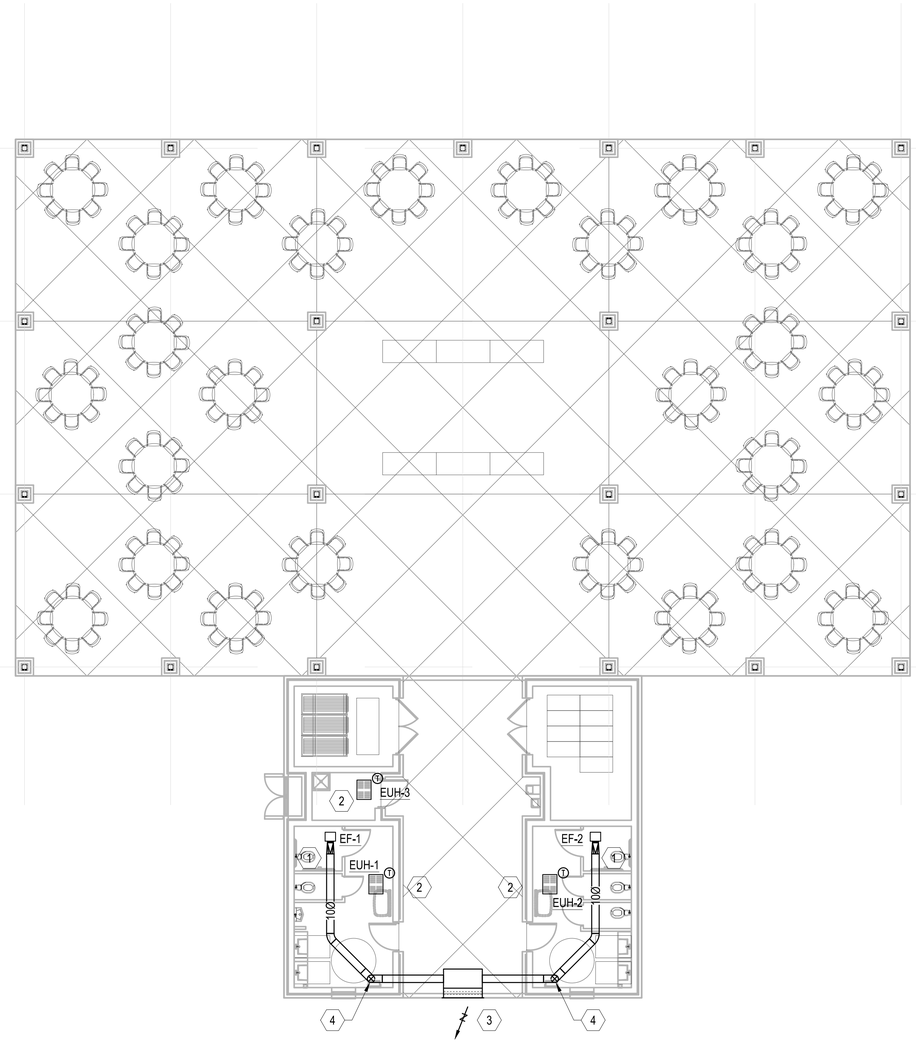

1 **HVAC PLAN**

8' 0' 8' 16'

SCALE: 1/8"=1'-0"

Smith Mechanical
Consulting & Design
ALABAMA CERTIFICATE OF AUTHORIZATION: CA-3717 E
7150 CHARLANDA CT.
FAIRHOPE, AL 36532
(251) 422-1364
ROGER J. SMITH, PE 24744

WHLC | ARCHITECTURE

TRANSIT HUB PAVILION

LOXLEY MUNICIPAL PARK
LOXLEY, ALABAMA

ALABAMA LICENSED No. 24744 PROFESSIONAL ENGINEER ROGER J. SMITH
5/23/2023

washer hill lipscomb cabaniss architecture, llc
copyright 2022

70 south section st fairhope, al
t 251.990.6200

21-205
MAY 23, 2023

HVAC PLAN

M2.00

PROJECT MANUAL AND SPECIFICATIONS

FOR

LOXLEY SECTION 5307 TRANSIT HUB

FTA / ESMPO 5307 Funded Project

Loxley, AL

BUILDING CONSTRUCTION PACKAGE

PROJECT #21-205

PREPARED BY:

WHLC ARCHITECTURE
70 SOUTH SECTION STREET
Suite 4
FAIRHOPE, AL 36532

SET NO. _____

AUGUST 4, 2023 **DIVISIONS 0 - 44**

DIVISION 0

CONDITIONS OF THE CONTRACT

PROFESSIONAL SEALS COVER SHEET

SEAL: Architect of Record WHLC Architecture, LLC Signature Date	SEAL: Civil Engineer S.E. Civil Engineering & Surveying Signature Date	SEAL: Structural Engineer Barter & Associates, Inc. Signature Date
SEAL: Mechanical/Plumbing Engineer Smith Mechanical Consulting & Design Signature Date	SEAL: Electrical Engineer Smith Mechanical Consulting & Design Signature Date	SEAL: Landscape Architect Christian Preus Landscape Architecture, PLLC Signature Date
SEAL: Signature Date	SEAL: Signature Date	SEAL: Signature Date

LOXLEY SECTION 5307 TRANSIT HUB

FTA/ESMPO 5307 FUNDED PROJECT
Loxley, Alabama

TABLE OF CONTENTS

		Professional Seals Cover Sheet	1 page
		Table of Contents	3 pages
DIVISION 0	CONDITIONS OF THE CONTRACT		
Section		Notice to Contractors - Invitation	2 pages
	00200	Instructions to Bidders	00200-1 thru 8
	00300	Information Available To Bidders	00300-1 thru 1
	00410	Bid Form	00410-1 thru 3
	00500	Bid Bond	4 pages
	00600	Performance Bond	4 pages
	00601	Insurance and Bond Checklist	00601-1 thru 2
	00700	General Conditions	00700-1 thru 1
	00701	Supplementary Conditions	00701-1 thru 2
	00800	Notice to Proceed	00800-1 thru 1
	00900	Construction Contract Agreement	00900-1 thru 2
		Davis Bacon Wage Rates	6 pages
		Federal Clauses	10 pages
		Federal Certifications	3 pages
Instructions to Proposers DBE Attachment			1 page
	"A"	Disadvantaged Business Enterprise (DBE) Participation	
DBE Payment and Reporting Requirements Attachments			8 pages
	"B"	Contractor Reporting Requirements	
	"C"	DBE Letter of Intent	
	"D"	DBE Affidavit	
	"E"	DBE Unavailable Certification	
	"F"	Prompt Payment Affidavit	
DIVISION 1	GENERAL REQUIREMENTS		
Section	01100	Summary of the Work	01010-1 thru 2

	01200	Price and Payment Procedures	01200-1 thru 5
	01300	Administrative Requirements	01300-1 thru 5
	01330	Submittal Procedures	01330-1 thru 5
	01400	Quality Requirements	01400-1 thru 5
	01500	Temporary Facilities and Controls	01500-1 thru 8
	01600	Product Requirements	01600-1 thru 3
	01700	Execution Requirements	01700-1 thru 8
DIVISION 2	SITE WORK		
Section	02362	Termite Control	02362-1 thru 3
DIVISION 3	CONCRETE		
Section	03300	Cast-In-Place Concrete	03300-1 thru 13
DIVISION 4	MASONRY		
Section	04065	Masonry Mortar and Grout	04065-1 thru 4
	04720	Cast Stone Masonry	04720-1 thru 10
	04810	Unit Masonry Assemblies	04810-1 thru 8
DIVISION 5	METALS		
Section	On Drawings		
DIVISION 6	WOOD AND PLASTIC		
Section	06114	Rough Carpentry	06114-1 thru 3
	06410	Custom Cabinets	06410-1 thru 4
DIVISION 7	THERMAL AND MOISTURE PROTECTION		
Section	07110	Dampproofing	07110-1 thru 3
	07213	Batt Insulation	07213-1 thru 2
	07410	Preformed Aluminum Soffit Panels, Solid and…	07410-1 thru 5
	07611	Pre-Fabricated Sheet Metal Roofing	07611-1 thru 12
	07620	Sheet Metal Flashing and Trim	07620-1 thru 5
	07900	Joint Sealers	07900-1 thru 4

DIVISION 8 DOORS AND WINDOWS

Section	08114	Standard Steel Doors	08114-1 thru 5
	08115	Standard Steel Frames	08115-1 thru 4
	08310	Access Doors / Panels	08310-1 thru 4
	08410	Aluminum Entrances and Storefronts	08410-1 thru 9
	08710	Door Hardware	08710-1 thru 7
	08800	Glazing	08800-1 thru 7

DIVISION 9 FINISHES

Section	09300	Tile	09300-1 thru 6
	09900	Painting	09900-1 thru 9
	09930	Concrete Stain and Clear Topcoat	09930-1 thru 5

DIVISION 10 SPECIALITIES

Section	10160	Metal Toilet Compartments	10160-1 thru 4
	10210	Wall Louvers	10210-1 thru 4
	10523	Fire Extinguishers and Cabinets	10523-1 thru 3
	10800	Toilet and Bath Accessories	10800-1 thru 4

DIVISION 15 MECHANICAL

Section On Drawings

DIVISION 16 ELECTRICAL

Section On Drawings

DIVISION 32 LANDSCAPE

Section On Drawings

INVITATION TO BID

CITY OF LOXLEY

Sealed Bids will be received by the City of Loxley in their offices located at 1089 S. Hickory St. Loxley, Alabama, until **10:00 A.M. on Tuesday, December 5, 2023**, then publicly opened thereafter, for furnishing all labor and materials, and performing all work required by the City of Loxley and described as follows:

City of Loxley Project No. 2023-02
Loxley Section 5307 Transit Hub Project

The Loxley Municipal Park Transit Hub Project includes the construction of a Transit Hub and various other site improvements including masonry walls, wayfinding signage, site furnishings and a restroom facility that includes plumbing and mechanical. The site work involved in the project scope includes, but is not limited to drainage, tree pruning, paving, electrical, lighting, landscape, and irrigation. This project location will require coordination with the City. This project's anticipated start date will be January 8, 2024.

Plans, Drawings and Specifications are on file and may be viewed by appointment only. Please contact the Project Manager, Brian Puckett, to schedule an appointment. Prior to opening, copies of the bid packet, including plans, drawings and specifications will be available at www.cityofloxley.com. Bid advertisement, addenda and other related documents will be posted on the City of Loxley website: www.cityofloxley.com. Questions or comments pertaining to this bid must be presented in writing and sent via e-mail to the attention of the **Project Manager, Brian Puckett**, e-mail: brian@whlcarchitecture.com seven (7) days prior to the bid opening or will be forever waived.

All Bids must be on blank bid forms provided in the Bid documents. Bids shall be accompanied by a BID SECURITY equal to five percent (5%) of the bid price, but not to exceed ten-thousand dollars ($10,000.00). BID SECURITY shall be in the form of a Bid Bond signed by a Bonding company authorized to do business in the State of Alabama, or a Cashier's Check payable to the City of Loxley.

A **Performance Bond** in the form and terms approved by the City of Loxley in an amount not less than the sum of the bid will be required at the signing of the CONTRACT, and in addition, a **Labor and Materials Bond** in an amount not less than fifty percent (50%) of the CONTRACT price insuring payment for all labor and materials.

THERE WILL BE A NON-MANDATORY PREBID MEETING on Wednesday, November 15, 2023, at 2:30 P.M. at the City of Loxley offices located at 1089 S. Hickory St. Loxley, Alabama**.** Bidders are not required to attend the meeting, but attendance is highly recommended.

The Project is federally funded by the Federal Transit Administration (FTA)/Eastern Shore Metropolitan Planning Organization (ESMPO) 5307 Urbanized Area grant program administered through the Alabama Department of Transportation. As such, the Contractor shall comply with all applicable Federal Clauses outlined in Attachment **"Federal Clauses"** of this solicitation. In addition, Contractor must be registered and in good standing in the System for Award Management (SAM.gov). The City of Loxley is an Equal Opportunity Employer and requires that all contractors comply with the Equal Employment Opportunity Commission (EEOC) laws and the provisions of the Contract documents in this regard.

Requirements and goals for Disadvantaged Business Enterprise (DBE) participation in this Project are as follows: A minimum of three point five eight percent (3.58%) of the total contract price, as awarded, shall be established as a goal to be made available to certified DBEs.

Prior to Contract award, the apparent successful bidder shall submit a written acknowledgement of the above goal and shall include names of DBE subcontractors, addresses of contact persons, a description of work to be performed, dollar values of each proposed DBE subcontract and proof of the subcontractors eligibility as a DBE. This information shall be submitted on Attachment C - DBE Letter of Intent and Attachment D - DBE Affidavit that are furnished with this solicitation. If the goals are not met, the bidder must demonstrate that sufficient good faith efforts

were made to meet the DBE contract goals and shall document the steps that were taken to obtain DBE participation (see Attachment E - DBE Unavailable Certification.) Failure to provide required documentation of good faith efforts may be reason for disqualification of the Bid/Proposal.

All bids, with their guarantee, must be enclosed in a sealed, opaque envelope, clearly identified on the outside as "**Sealed Bid**" **with Bid Name, Bid Number, City of Loxley's name and address, and the Bidder's name, address, and General Contractor's License Number.** Each bid must be in a separate envelope. Bids made out in pencil will not be accepted. Failure to observe the instructions contained herein will constitute grounds for rejection of your bid. The City reserves the right to accept or reject all bids, or any portions thereof, and to waive informalities, and to furnish any item of material or work to change the amount of the **CONTRACT**, whichever is in the best interest of the City of Loxley.

The **CONTRACTOR** must furnish to the City of Loxley at the time of the signing of the **CONTRACT**, a Certificate of Insurance coverage as provided in the Bid documents which will include Comprehensive Insurance, Contractor's Automobile, and where applicable, Owner's Protective Liability insurance, Subcontractor's Public Liability and Property Damage Insurance. The company that is awarded the bid must have Workman's Compensation Insurance on all its employees, if work is to be performed on City of Loxley premises. General Liability Insurance, specifying coverage, must be maintained to hold the City of Loxley harmless in the event of an accident. See bid packet for details.

No bids will be considered unless the Bidder, whether resident or non-resident of Alabama, is properly qualified to submit a bid for this type of work in accordance with all applicable laws of the State of Alabama. Where applicable, this shall include evidence of holding a current license from the Alabama Licensing Board for General Contractors, Montgomery, Alabama, as required by Chapter 8, Title 34, of the Code of Alabama, 1975. In addition, the awarded vendor, if a non-resident of the State, and if a corporation, shall show evidence of having qualified with the Secretary of State to do business in the State of Alabama, http://sos.alabama.gov/business-entities. Awarded Bidder must have a current business license or purchase a business license with the City of Loxley prior to work performed. No bids shall be withdrawn for the period of thirty (30) days subsequent to the opening of bids without the consent of the City of Loxley, Baldwin County, Alabama. Once completed, a tabulation of the responsive and responsible bids will be available for public viewing by visiting the following web address: www.cityofloxley.com.

Robert Davis, Superintendent of Utilities
City of Loxley
Loxley, Alabama

Publish: November 7, 2023
November 14, 2023
November 21, 2023

DOCUMENT 00200

INSTRUCTIONS TO BIDDERS

PART 1 GENERAL

1.1 Document Includes:

A. Bid submission

B. Intent

C. Work identified in contract documents

D. Contract Time

E. Definitions

F. Contract Documents identification

G. Availability of documents

H. Examination of documents

I. Inquiries and Addenda

J. Product substitutions

K. Site examination

L. Prebid conference

M. Bidder qualifications

N. Subcontractors

O. Bid requirements

P. Submission procedure

Q. Bid ineligibility

R. Security deposit

S. Performance and Labor and Material Payment Bond

T. Power of Attorney

U. Bid Form requirements

V. Fees for change in the Work

W. Bid Form signature

X. Selection and award of alternates

Y. Bid opening

Z. Duration of offer

AA. Acceptance of offer

1.2 RELATED DOCUMENTS:

A. Document 00300-Information Available To Bidders.

B. Document 00410- Bid Form-Stipulated Price

1.3 BID SUBMISSION

A. Sealed Bids will be received by **City of Loxley, 1089 S. Hickory Street, Loxley, Alabama, 36551, until 10:00 A.M. local time, December 5, 2023 (Tuesday) at which time they will be opened in the offices of City of Loxley.** Bids submitted after the above time will be returned to Bidder unopened.

B. Amendments to submitted Bids will be permitted when received in writing prior to bid closing and when endorsed by the same party or parties who signed and sealed the Bid.

C. Bidders may withdraw their Bid by written request at any time before bid closing.

1.4 INTENT

A. The intent of this Bid request is to obtain an offer to perform work to complete the Loxley Section 5307 Transit Hub - Construction for a Stipulated Sum contract, in accordance with Contract Documents.

1.5 WORK IDENTIFIED IN CONTRACT DOCUMENTS

A. Work of this proposed Contract comprises work as outlined and detailed in the Drawings, Project Manual and Addenda.

B. Location: Loxley, AL.

1.6 CONTRACT TIME

A. Contract Time is identified in the Bid Form. The completion date in the Agreement shall be the Contract Time added to the commencement date.

1.7 DEFINITIONS

A. Bidding Documents: Include the Advertisement or Invitation to Bid, Instructions to Bidders, the Bid Form, the Bid Bond Forms, and the proposed Contract Documents (Drawings & Specifications), including any Addenda issued prior to receipt of bids.

B. Contract Documents: Defined in the AIA Document – A201, 2017; including issued Addenda.

C. Bid: Executed Bid Form and required attachments submitted in accordance with these Instructions to Bidders.

D. Bid Sum: Monetary sum identified by the Bidder in the Bid Form.

E. Owner: Wherever the term “Owner” is used in these specifications, it refers to the "City of Loxley".

F. Architect: Wherever the term “Architect” is used in these specifications, it refers to the Architect, WHLC Architecture, 70 South Section Street, Suite 4 Fairhope, AL 36532, who by separate contract with the Owner is authorized to provide the Architectural Services for this Project.

G. All definitions set forth in the General Conditions of AIA Document A201 are applicable to these Instructions to Bidders.

H. Addenda are written or graphic instruments issued prior to the execution of the Contract, which modify or interpret the Bidding Documents, including Drawings and Specifications, by additions, deletions, clarifications or corrections. Addenda will become part of the Contract Documents when the Construction Contract is executed.

1.8 CONTRACT DOCUMENTS IDENTIFICATION

A. The contract Documents are identified as: Loxley Section 5307 Transit Hub, architect’s project #21-205, as prepared by WHLC Architecture, 70 South Section Street, Suite 4, Fairhope, Al 36532.

1.9 AVAILABLITY OF DOCUMENTS

A. Bidding Documents may be obtained at the office of Mr. Robert Davis, Superintendent of Utilities for City of Loxley, located at 1089 S. Hickory Street, Loxley, AL 36551.

B. Partial sets of Bidding Documents will not be issued.

C. Bidding Documents will not be issued to subcontractors.

D. Bidding Documents are made available only for the purpose of obtaining offers for this Project. Their use does not grant a license for other purposes.

1.10 EXAMINATION OF DOCUMENTS

A. Upon receipt of Bidding Documents verify documents are complete. Notify Architect/Engineer if documents are not complete.

B. Immediately notify Architect/Engineer upon finding discrepancies or omissions in Bidding Documents.

C. Each Bidder, by making his bid, represents that he has read and understands the Bidding Documents.

D. Each Bidder, by making his bid, represents that he has visited the sites and familiarized himself with local conditions under which the work is to be performed.

E. No allowance will be made to any Bidder because of lack of examination of the proposed Contract Documents or the site of the Work, or for lack of knowledge of any conditions affecting the Work. The submission of a proposal shall be construed as conclusive evidence that the Bidder has made such examinations.

1.11 INQUIRIES AND ADDENDA

A. Direct questions in writing to the office of Robert Davis, Superintendent of Utilities, located at 1089 S. Hickory Street, Loxley, AL 36551. Inquiries should be submitted in writing via e-mail to rdavis@cityofloxley.com.

B. Verbal answers are not binding on any party.

C. Submit questions not less than 7 days before date set for receipt of Bids. Replies will be made by Addenda.

D. Addenda may be issued during bidding period and up to 2 day prior to date set for receipt of Bids. Addenda will be sent to known Bidders via e-mail. Addenda become part of the Contract Documents. Include resultant costs in the Bid Sum.

E. Failure of any bidder to receive such addendum or interpretation, or to acknowledge receipt on the bid form, shall not relieve such bidder from any obligation under his bid as submitted. All addenda so issued shall become part of the Contract Documents.

1.12 PRODUCT SUBSTITUTIONS

A. Where Bidding Documents stipulate particular Products, substitution requests will be considered by the Architect up to 10 days before receipt of Bids.

B. With each substitution request, provide sufficient information for Architect/Engineer to determine acceptability of proposed products.

C. When a request to substitute a Product is made, Architect/Engineer may approve the substitution. Approved substitutions will be identified by Addenda.

D. In submission of substitutions to Products specified, Bidders shall include in their Bid, changes required in the Work and changes to Contract Time and Contract Sum to accommodate such approved substitutions. Later claims by the Bidder for an addition to the Contract Time or Contract Sum because of changes in Work necessitated by use of substitutions will not be considered.

E. Substitute Products when request is submitted as an attachment to the Bid Form.

F. Provide complete information on required revisions to other Work to accommodate each substitution, the value of additions to or reductions from the Bid Sum including revisions to other Work.

G. Provide Products as specified unless substitutions are submitted in this manner and subsequently accepted.

H. Approval to submit substitution requests prior to submission of Bids is not required.

I. Submittal of substitution requests in no way guarantees acceptance of proposed substitution.

1.13 SITE EXAMINATION

A. Examine Project site before submitting a Bid.

B. To assist Bidders in assessing subsoil conditions at site, a geo-technical report is available upon request.

1.14 BIDDER QUALIFICATIONS

A. To demonstrate qualification for performing the Work of this Contract, Bidders may be requested to submit written evidence of their ability to complete this work on time and in budget, as well as examples of completed work of a similar size and scope.

1.15 SUBCONTRACTORS

A. The Owner reserves the right to reject a proposed Subcontractor for reasonable cause.

B. Refer to AIA Document A201-2017, Article 5 of General Conditions.

1.16 BID REQUIREMENTS

A. All blank spaces in the Bid Form must be filled in, type written, or hand written in ink, and all amounts must be in words as well as in figures. In case of a discrepancy between words and figures, the words will govern and the figures will be corrected. In case of discrepancy between unit price and the extension, the unit price will govern and the extension along with the total sum of extension and the stated subtotal or total, the

corrected subtotal or total will govern. For items where no bid is submitted or the Bidder is not bidding that portion of the Work, insert "NO BID" in space provided for price. A bid shall be submitted for all alternates unless the alternate results in no change in price in which case "NO CHANGE" shall be entered in the space provided for the alternate bid amount, or in the case where the Bidder is not bidding on that portion of the Work , “NO BID” shall be entered in the space provided.

B. Any bid which fails to name a price in both figures and in writing will be deemed informal and it may be rejected; in case of any discrepancies between the price written in the bid, and that given in figures, the price in writing will be considered the bid

C. Any bid may be withdrawn prior to the scheduled time for the opening of bids or authorized postponement thereof.

1.17 SUBMISSION PROCEDURE

A. Bidders shall be solely responsible for delivery of Bids in manner and time prescribed.

B. All bids shall be delivered, sealed in an opaque envelope, with the name of the project in the lower left hand corner, to the place designated in the Advertisement for Bids, at or before the time set for the receipt of bids.

C. No telephoned, telefaxed or telegraphed proposals, corrections or modifications will be considered

D. The Owner may consider informal any bid not prepared and submitted in accordance with the provisions hereof and may waive any informalities or reject any and all bids.

1.18 BID INELIGIBILITY

A. Bids that are unsigned, improperly signed or sealed, conditional, illegible, obscure, contain arithmetical errors, erasures, alterations, or irregularities of any kind, may be declared unacceptable at Owner’s discretion.

B. Bid Forms, Appendices, and enclosures which are improperly prepared may be declared unacceptable at Owner’s discretion.

C. Failure to provide security deposit, bonds or insurance requirements will invalidate the Bid at the discretion of the Owner.

1.19 SECURITY DEPOSIT

A. Bids shall be accompanied by security deposit as follows:
   1. Each bid must be accompanied by certified check of the Bidder; or a bid bond duly executed by the Bidder as principal, signed by an agent resident in Alabama, and having as surety thereon a surety company authorized to do business in Alabama, rated A or better by A.M. Best Company, and which is acceptable to the Owner; in the amount of 5% of the bid; not to exceed $10,000.00. Such checks or bid bonds will be returned, upon demand, after the Owner and the accepted Bidder have

executed the Contract, or, if no award has been made within forty-five (45) days after date of the opening of bids, upon demand of the Bidder at any time thereafter, so long as he has not been notified of the acceptance of his bid.

2. Make bid security payable to City of Loxley, AL.

3. Bonds shall be written or countersigned by an Alabama Resident Agent.

4. AIA A310 Bid Bond Form to be used and included with bid documents.

1.20 PERFORMANCE AND LABOR AND MATERIAL PAYMENT BOND

A. The Owner will require the Contractor to furnish bond in the amount of the Contract Sum covering faithful performance of the Contract and payment of all obligations arising there under. Bond form shall be that designated in this Project Manual and with surety acceptable to the Owner, licensed to do business in Alabama, and rated A or better by A.M. Best Company. Bonds shall be signed by an agent resident in Alabama.

B. All certificates and contracts must be completed in accordance with Section 00601 – Insurance and Bond Check List, with a completed copy of the Insurance and Bond Checklist included with transmittal of same. Incomplete Checklist Submittal will be returned to the Contractor post haste, no questions asked.

1.21 POWER OF ATTORNEY

A. Attorneys in fact who sign Bid Bonds or Contract Bonds must file with each bond a certified and effectively dated copy of their Power of Attorney.

1.22 `BID FORM REQUIREMENTS

A. Complete requested information in the Bid Form.

1.23 FEES FOR CHANGES IN THE WORK

A. Include fees for overhead and profit on Bidder’s own Work and Work by Subcontractors.

1.24 BID FORM SIGNATURE

A. Signatures on bids must be in longhand and by a person or persons duly authorized to make contract. Bidder's legal name must be clearly stated. If Bidder is a Corporation affix corporate seal and write State of Incorporation in space provided.

1.25 SELECTION AND AWARD OF ALTERNATES

A. Bids will be evaluated on base Bid Sum. After determination of accepted Bidder, consideration will be given to alternates and Bid Sum adjustments.

1.26 DURATION OF OFFER

A. Bids shall remain open to acceptance and shall be irrevocable for a period of 45 days after bid closing date.

1.27 ACCEPTANCE OF OFFER

A. The Owner reserves the right to accept or reject any or all offers.

B. After acceptance by the Owner, the Architect on behalf of the Owner, will issue to the accepted Bidder, a written Bid Acceptance.

C. Notwithstanding delay in the preparation and execution of the Agreement, accepted Bidder shall be prepared, upon written Notice to Proceed, to commence work within 15 days following receipt of official written order of the Owner to proceed, or on date stipulated in such order.

D. The accepted bidder shall assist and cooperate with the Owner to prepare the Agreement, and within 7 days following its presentation shall execute Agreement and return it to the Owner.

1.28 SALES AND USE TAX EXEMPTION

A. City of Loxley states that this project shall be tax exempt:

B. The Base Bid (and all Alternate Bids) submitted on the bid form will NOT include sales and use tax. A listing of approved subcontractors must be provided within 48 hours (or less if so required in bid documents) of acceptance of bids so that agency memorandums may be acknowledged.

END OF DOCUMENT

SECTION 00300

INFORMATION AVAILABLE TO BIDDERS

1.1 BUILDING DATA

A. Existing Conditions:

1. The Contractor should visit the site and acquaint themselves with site conditions.

2. Prior to bidding, the Contractor may make their own investigations to satisfy themselves with existing conditions.

END OF SECTION

DOCUMENT 00410

BID FORM

TO: **CITY OF LOXLEY, AL** (hereinafter called "Owner")
1089 S. Hickory Street
Post Office Box 9
Loxley, Alabama 36551

PROJECT: **LOXLEY SECTION 5307 TRANSIT HUB**, Loxley, AL

in accordance with the Contract Documents, dated July, 2023, prepared by WHLC Architecture, LLC

DATE: _____

In compliance with your Notice to Contractors Invitation for Bids and subject to all conditions thereof, the undersigned,

_____
(Legal Name of Bidder)

(hereinafter called "Bidder"), a _____
(State)
a Corporation a Partnership an individual (other) _____

doing business as_____

BIDDER'S REPRESENTATION:
The Bidder, in compliance with your Notice to Contractors Invitation for Bids for the ***Loxley Section 5307 Transit Hub Project, Loxley, Alabama*** having examined the Drawings and Project Manual and the site of the proposed work, and being familiar with all of the conditions surrounding the construction of the proposed Project, and the availability of materials and labor, hereby proposes to furnish all labor, materials and supplies, and to construct the Project in accordance with the Contract Documents, within the time set forth therein, and for the prices stated below:

***LOXLEY SECTION 5307 TRANSIT HUB, Loxley, Alabama*:**

For all work required by the Contract Documents the lump sum of: ($_____)

_____Dollars

The ***Bidder*** hereby certifies that, should he be awarded the Contract, he will commence work under the Contract on or before a date to be specified in a written "Notice to Proceed" to be delivered by the Owner, and that he will fully pursue and complete the Contract within (***300) consecutive calendar days*** thereafter.

Bidder understands that the Owner reserves the right to reject any or all bids and to waive any informalities or irregularities in the bidding.

Bidder agrees that this bid shall be good and may not be withdrawn for a period of forty-five (45) calendar days after the scheduled closing time for receiving bids.

ADDENDA:

Bidder acknowledges receipt of the following Addenda:

Addendum No.____ dated_____ Addendum No.____ dated_____

Addendum No.____ dated_____ Addendum No.____ dated_____

ALLOWANCES: (See Section 01200 Price and Payment Procedures for description)

Allowance No 1: Brick Veneer Allowance

Brick Quantity_____@ $500 per thousand
Colored Mortar Quantity_____ @ $15 per bag

Allowance No. 2: Signage Allowance: $1500.00

ALTERNATES: (See Section 01200 Price and Payment Procedures for description)

Alternate No 1: Builder's Risk Insurance: Contractor to furnish a cost for Builder's Risk Insurance for the project.
_____Dollars($_____) add / deduct

BID SECURITY: The undersigned agrees to enter into a Construction Contract and furnish the prescribed Performance and Payment Bonds and evidence of insurance within fifteen (15) calendar days, or such other period stated in the Bid Documents, after the contract forms have been presented for signature, provided such presentation is made within 30 calendar days after the opening of bids, or such other period stated in the Bid Documents. As security for this condition, the undersigned further agrees that the funds represented by the Bid Bond (or cashier's check) attached hereto may be called and paid into the account of the owner as liquidated damages for failure to so comply.

Attached hereto is a: (*Mark the appropriate box and provide the applicable information.)*

□ Bid Bond, executed by _____as Surety,

□ a cashier's check on the _____ Bank of _____

for the sum of _____Dollars

($ _____) made payable to City of Loxley, AL.

BIDDER'S ALABAMA LICENSE:
State License for General Contracting: _____ _____
License Number Bid Limit

_____
Classification

CERTIFICATIONS: The undersigned certifies that he or she is authorized to execute contracts on behalf of the Bidder as legally named, that this proposal is submitted in good faith without fraud or collusion with any other bidder, that the information indicated in this document is true and complete, and that the bid is made in

full accord with State law. Notice of acceptance may be sent to the undersigned at the address set forth below.

The Bidder also declares that a list of all proposed major subcontractors and suppliers will be submitted at a time subsequent to the receipt of bids as established by the Owner in the Bid Documents but in no event shall this time exceed twenty-four (24) hours after receipt of bids.

Legal Name of Bidder _____

Mailing Address _____

*** By (Legal Signature)** _____

* Name (type or print) _____ *(Seal)*

* Title _____

Telephone Number _____.

* If other than the individual proprietor, or an above named member of the Partnership, or the above named president, vice-president, or secretary of the Corporation, attach written authority to bind the Bidder. Any modification to a bid shall be over the initials of the person signing the bid, or of an authorized representative.

DRAFT

AIA® Document A312® – 2010

Payment Bond

CONTRACTOR:
(Name, legal status and address)

« »« »
« »

SURETY:
(Name, legal status and principal place of business)

« »« »
« »

OWNER:
(Name, legal status and address)

«City of Loxley»«»
«1089 S. Hickory Street
Loxley, AL 36551»

CONSTRUCTION CONTRACT
Date: « »
Amount: $ «0.00»
Description:
(Name and location)

«Loxley Section 5307 Transit Hub»
« »

BOND
Date:
(Not earlier than Construction Contract Date)
« »
Amount: $ « »
Modifications to this Bond: **« »** None **« »** See Section 18

CONTRACTOR AS PRINCIPAL		**SURETY**	
Company:	*(Corporate Seal)*	Company:	*(Corporate Seal)*
Signature:		Signature:	
Name and Title:	« »« »	Name and Title:	« »« »

(Any additional signatures appear on the last page of this Payment Bond.)

(FOR INFORMATION ONLY — Name, address and telephone)

AGENT or **BROKER:**

« »
« »
« »

OWNER'S REPRESENTATIVE:
(Architect, Engineer or other party:)

«»
«»
«»
«»
«»
«»

ADDITIONS AND DELETIONS:
The author of this document has added information needed for its completion. The author may also have revised the text of the original AIA standard form. An *Additions and Deletions Report* that notes added information as well as revisions to the standard form text is available from the author and should be reviewed.

This document has important legal consequences. Consultation with an attorney is encouraged with respect to its completion or modification.

Any singular reference to Contractor, Surety, Owner or other party shall be considered plural where applicable.

ELECTRONIC COPYING of any portion of this AIA® Document to another electronic file is prohibited and constitutes a violation of copyright laws as set forth in the footer of this document.

AIA Document A312 – 2010 Payment Bond. Copyright © 2010. All rights reserved. "The American Institute of Architects," "American Institute of Architects," "AIA," the AIA Logo, and "AIA Contract Documents" are trademarks of The American Institute of Architects. This draft was produced at 13:11:11 CT on 07/21/2023 under Order No.2114349659 which expires on 08/06/2023, is not for resale, is licensed for one-time use only, and may only be used in accordance with the AIA Contract Documents® Terms of Service. To report copyright violations, e-mail docinfo@aiacontracts.com.
User Notes: (1733653583)

§ 1 The Contractor and Surety, jointly and severally, bind themselves, their heirs, executors, administrators, successors and assigns to the Owner to pay for labor, materials and equipment furnished for use in the performance of the Construction Contract, which is incorporated herein by reference, subject to the following terms.

§ 2 If the Contractor promptly makes payment of all sums due to Claimants, and defends, indemnifies and holds harmless the Owner from claims, demands, liens or suits by any person or entity seeking payment for labor, materials or equipment furnished for use in the performance of the Construction Contract, then the Surety and the Contractor shall have no obligation under this Bond.

§ 3 If there is no Owner Default under the Construction Contract, the Surety's obligation to the Owner under this Bond shall arise after the Owner has promptly notified the Contractor and the Surety (at the address described in Section 13) of claims, demands, liens or suits against the Owner or the Owner's property by any person or entity seeking payment for labor, materials or equipment furnished for use in the performance of the Construction Contract and tendered defense of such claims, demands, liens or suits to the Contractor and the Surety.

§ 4 When the Owner has satisfied the conditions in Section 3, the Surety shall promptly and at the Surety's expense defend, indemnify and hold harmless the Owner against a duly tendered claim, demand, lien or suit.

§ 5 The Surety's obligations to a Claimant under this Bond shall arise after the following:

§ 5.1 Claimants, who do not have a direct contract with the Contractor,

- **.1** have furnished a written notice of non-payment to the Contractor, stating with substantial accuracy the amount claimed and the name of the party to whom the materials were, or equipment was, furnished or supplied or for whom the labor was done or performed, within ninety (90) days after having last performed labor or last furnished materials or equipment included in the Claim; and
- **.2** have sent a Claim to the Surety (at the address described in Section 13).

§ 5.2 Claimants, who are employed by or have a direct contract with the Contractor, have sent a Claim to the Surety (at the address described in Section 13).

§ 6 If a notice of non-payment required by Section 5.1.1 is given by the Owner to the Contractor, that is sufficient to satisfy a Claimant's obligation to furnish a written notice of non-payment under Section 5.1.1.

§ 7 When a Claimant has satisfied the conditions of Sections 5.1 or 5.2, whichever is applicable, the Surety shall promptly and at the Surety's expense take the following actions:

§ 7.1 Send an answer to the Claimant, with a copy to the Owner, within sixty (60) days after receipt of the Claim, stating the amounts that are undisputed and the basis for challenging any amounts that are disputed; and

§ 7.2 Pay or arrange for payment of any undisputed amounts.

§ 7.3 The Surety's failure to discharge its obligations under Section 7.1 or Section 7.2 shall not be deemed to constitute a waiver of defenses the Surety or Contractor may have or acquire as to a Claim, except as to undisputed amounts for which the Surety and Claimant have reached agreement. If, however, the Surety fails to discharge its obligations under Section 7.1 or Section 7.2, the Surety shall indemnify the Claimant for the reasonable attorney's fees the Claimant incurs thereafter to recover any sums found to be due and owing to the Claimant.

§ 8 The Surety's total obligation shall not exceed the amount of this Bond, plus the amount of reasonable attorney's fees provided under Section 7.3, and the amount of this Bond shall be credited for any payments made in good faith by the Surety.

§ 9 Amounts owed by the Owner to the Contractor under the Construction Contract shall be used for the performance of the Construction Contract and to satisfy claims, if any, under any construction performance bond. By the Contractor furnishing and the Owner accepting this Bond, they agree that all funds earned by the Contractor in the performance of the Construction Contract are dedicated to satisfy obligations of the Contractor and Surety under this Bond, subject to the Owner's priority to use the funds for the completion of the work.

AIA Document A312 – 2010 Payment Bond. Copyright © 2010. All rights reserved. "The American Institute of Architects," "American Institute of Architects," "AIA," the AIA Logo, and "AIA Contract Documents" are trademarks of The American Institute of Architects. This draft was produced at 13:11:11 CT on 07/21/2023 under Order No.2114349659 which expires on 08/06/2023, is not for resale, is licensed for one-time use only, and may only be used in accordance with the AIA Contract Documents® Terms of Service. To report copyright violations, e-mail docinfo@aiacontracts.com.
User Notes: (1733653583)

§ 10 The Surety shall not be liable to the Owner, Claimants or others for obligations of the Contractor that are unrelated to the Construction Contract. The Owner shall not be liable for the payment of any costs or expenses of any Claimant under this Bond, and shall have under this Bond no obligation to make payments to, or give notice on behalf of, Claimants or otherwise have any obligations to Claimants under this Bond.

§ 11 The Surety hereby waives notice of any change, including changes of time, to the Construction Contract or to related subcontracts, purchase orders and other obligations.

§ 12 No suit or action shall be commenced by a Claimant under this Bond other than in a court of competent jurisdiction in the state in which the project that is the subject of the Construction Contract is located or after the expiration of one year from the date (1) on which the Claimant sent a Claim to the Surety pursuant to Section 5.1.2 or 5.2, or (2) on which the last labor or service was performed by anyone or the last materials or equipment were furnished by anyone under the Construction Contract, whichever of (1) or (2) first occurs. If the provisions of this Paragraph are void or prohibited by law, the minimum period of limitation available to sureties as a defense in the jurisdiction of the suit shall be applicable.

§ 13 Notice and Claims to the Surety, the Owner or the Contractor shall be mailed or delivered to the address shown on the page on which their signature appears. Actual receipt of notice or Claims, however accomplished, shall be sufficient compliance as of the date received.

§ 14 When this Bond has been furnished to comply with a statutory or other legal requirement in the location where the construction was to be performed, any provision in this Bond conflicting with said statutory or legal requirement shall be deemed deleted herefrom and provisions conforming to such statutory or other legal requirement shall be deemed incorporated herein. When so furnished, the intent is that this Bond shall be construed as a statutory bond and not as a common law bond.

§ 15 Upon request by any person or entity appearing to be a potential beneficiary of this Bond, the Contractor and Owner shall promptly furnish a copy of this Bond or shall permit a copy to be made.

§ 16 Definitions

§ 16.1 Claim. A written statement by the Claimant including at a minimum:

- **.1** the name of the Claimant;
- **.2** the name of the person for whom the labor was done, or materials or equipment furnished;
- **.3** a copy of the agreement or purchase order pursuant to which labor, materials or equipment was furnished for use in the performance of the Construction Contract;
- **.4** a brief description of the labor, materials or equipment furnished;
- **.5** the date on which the Claimant last performed labor or last furnished materials or equipment for use in the performance of the Construction Contract;
- **.6** the total amount earned by the Claimant for labor, materials or equipment furnished as of the date of the Claim;
- **.7** the total amount of previous payments received by the Claimant; and
- **.8** the total amount due and unpaid to the Claimant for labor, materials or equipment furnished as of the date of the Claim.

§ 16.2 Claimant. An individual or entity having a direct contract with the Contractor or with a subcontractor of the Contractor to furnish labor, materials or equipment for use in the performance of the Construction Contract. The term Claimant also includes any individual or entity that has rightfully asserted a claim under an applicable mechanic's lien or similar statute against the real property upon which the Project is located. The intent of this Bond shall be to include without limitation in the terms "labor, materials or equipment" that part of water, gas, power, light, heat, oil, gasoline, telephone service or rental equipment used in the Construction Contract, architectural and engineering services required for performance of the work of the Contractor and the Contractor's subcontractors, and all other items for which a mechanic's lien may be asserted in the jurisdiction where the labor, materials or equipment were furnished.

§ 16.3 Construction Contract. The agreement between the Owner and Contractor identified on the cover page, including all Contract Documents and all changes made to the agreement and the Contract Documents.

AIA Document A312 – 2010 Payment Bond. Copyright © 2010. All rights reserved. "The American Institute of Architects," "American Institute of Architects," "AIA," the AIA Logo, and "AIA Contract Documents" are trademarks of The American Institute of Architects. This draft was produced at 13:11:11 CT on 07/21/2023 under Order No.2114349659 which expires on 08/06/2023, is not for resale, is licensed for one-time use only, and may only be used in accordance with the AIA Contract Documents® Terms of Service. To report copyright violations, e-mail docinfo@aiacontracts.com.
User Notes: (1733653583)

§ 16.4 Owner Default. Failure of the Owner, which has not been remedied or waived, to pay the Contractor as required under the Construction Contract or to perform and complete or comply with the other material terms of the Construction Contract.

§ 16.5 Contract Documents. All the documents that comprise the agreement between the Owner and Contractor.

§ 17 If this Bond is issued for an agreement between a Contractor and subcontractor, the term Contractor in this Bond shall be deemed to be Subcontractor and the term Owner shall be deemed to be Contractor.

§ 18 Modifications to this bond are as follows:

« »

(Space is provided below for additional signatures of added parties, other than those appearing on the cover page.)

CONTRACTOR AS PRINCIPAL		**SURETY**	
Company:	*(Corporate Seal)*	Company:	*(Corporate Seal)*
Signature:		Signature:	
Name and Title:	« »« »	Name and Title:	« »« »
Address:	« »	Address:	« »

AIA Document A312 – 2010 Payment Bond. Copyright © 2010. All rights reserved. "The American Institute of Architects," "American Institute of Architects," "AIA," the AIA Logo, and "AIA Contract Documents" are trademarks of The American Institute of Architects. This draft was produced at 13:11:11 CT on 07/21/2023 under Order No.2114349659 which expires on 08/06/2023, is not for resale, is licensed for one-time use only, and may only be used in accordance with the AIA Contract Documents® Terms of Service. To report copyright violations, e-mail docinfo@aiacontracts.com.
User Notes: (1733653583)

DRAFT

AIA® Document A312® – 2010

Performance Bond

CONTRACTOR:
(Name, legal status and address)

« »« »
« »

SURETY:
(Name, legal status and principal place of business)

« »« »
« »

OWNER:
(Name, legal status and address)

«City of Loxley»«»
«1089 S. Hickory Street
Loxley, AL 36551»

CONSTRUCTION CONTRACT
Date: « »
Amount: $ «0.00»
Description:
(Name and location)

«Loxley Section 5307 Transit Hub»
« »

BOND
Date:
(Not earlier than Construction Contract Date)
« »
Amount: $ « »
Modifications to this Bond: « » None « » See Section 16

CONTRACTOR AS PRINCIPAL
Company: *(Corporate Seal)*

Signature: _____
Name and Title: « »« »

SURETY
Company: *(Corporate Seal)*

Signature: _____
Name and Title: « »« »

(Any additional signatures appear on the last page of this Performance Bond.)

(FOR INFORMATION ONLY — Name, address and telephone)

AGENT or **BROKER:**

« »
« »
« »

OWNER'S REPRESENTATIVE:
(Architect, Engineer or other party:)

«»
«»
«»
«»
«»
«»

ADDITIONS AND DELETIONS:
The author of this document has added information needed for its completion. The author may also have revised the text of the original AIA standard form. An *Additions and Deletions Report* that notes added information as well as revisions to the standard form text is available from the author and should be reviewed.

This document has important legal consequences. Consultation with an attorney is encouraged with respect to its completion or modification.

Any singular reference to Contractor, Surety, Owner or other party shall be considered plural where applicable.

ELECTRONIC COPYING of any portion of this AIA® Document to another electronic file is prohibited and constitutes a violation of copyright laws as set forth in the footer of this document.

AIA Document A312 – 2010 Performance Bond. Copyright © 2010. All rights reserved. "The American Institute of Architects," "American Institute of Architects," "AIA," the AIA Logo, and "AIA Contract Documents" are trademarks of The American Institute of Architects. This draft was produced at 13:14:40 CT on 07/21/2023 under Order No.2114349659 which expires on 08/06/2023, is not for resale, is licensed for one-time use only, and may only be used in accordance with the AIA Contract Documents® Terms of Service. To report copyright violations, e-mail docinfo@aiacontracts.com.
User Notes: (1936224050)

§ 1 The Contractor and Surety, jointly and severally, bind themselves, their heirs, executors, administrators, successors and assigns to the Owner for the performance of the Construction Contract, which is incorporated herein by reference.

§ 2 If the Contractor performs the Construction Contract, the Surety and the Contractor shall have no obligation under this Bond, except when applicable to participate in a conference as provided in Section 3.

§ 3 If there is no Owner Default under the Construction Contract, the Surety's obligation under this Bond shall arise after

.1 the Owner first provides notice to the Contractor and the Surety that the Owner is considering declaring a Contractor Default. Such notice shall indicate whether the Owner is requesting a conference among the Owner, Contractor and Surety to discuss the Contractor's performance. If the Owner does not request a conference, the Surety may, within five (5) business days after receipt of the Owner's notice, request such a conference. If the Surety timely requests a conference, the Owner shall attend. Unless the Owner agrees otherwise, any conference requested under this Section 3.1 shall be held within ten (10) business days of the Surety's receipt of the Owner's notice. If the Owner, the Contractor and the Surety agree, the Contractor shall be allowed a reasonable time to perform the Construction Contract, but such an agreement shall not waive the Owner's right, if any, subsequently to declare a Contractor Default;

.2 the Owner declares a Contractor Default, terminates the Construction Contract and notifies the Surety; and

.3 the Owner has agreed to pay the Balance of the Contract Price in accordance with the terms of the Construction Contract to the Surety or to a contractor selected to perform the Construction Contract.

§ 4 Failure on the part of the Owner to comply with the notice requirement in Section 3.1 shall not constitute a failure to comply with a condition precedent to the Surety's obligations, or release the Surety from its obligations, except to the extent the Surety demonstrates actual prejudice.

§ 5 When the Owner has satisfied the conditions of Section 3, the Surety shall promptly and at the Surety's expense take one of the following actions:

§ 5.1 Arrange for the Contractor, with the consent of the Owner, to perform and complete the Construction Contract;

§ 5.2 Undertake to perform and complete the Construction Contract itself, through its agents or independent contractors;

§ 5.3 Obtain bids or negotiated proposals from qualified contractors acceptable to the Owner for a contract for performance and completion of the Construction Contract, arrange for a contract to be prepared for execution by the Owner and a contractor selected with the Owner's concurrence, to be secured with performance and payment bonds executed by a qualified surety equivalent to the bonds issued on the Construction Contract, and pay to the Owner the amount of damages as described in Section 7 in excess of the Balance of the Contract Price incurred by the Owner as a result of the Contractor Default; or

§ 5.4 Waive its right to perform and complete, arrange for completion, or obtain a new contractor and with reasonable promptness under the circumstances:

.1 After investigation, determine the amount for which it may be liable to the Owner and, as soon as practicable after the amount is determined, make payment to the Owner; or

.2 Deny liability in whole or in part and notify the Owner, citing the reasons for denial.

§ 6 If the Surety does not proceed as provided in Section 5 with reasonable promptness, the Surety shall be deemed to be in default on this Bond seven days after receipt of an additional written notice from the Owner to the Surety demanding that the Surety perform its obligations under this Bond, and the Owner shall be entitled to enforce any remedy available to the Owner. If the Surety proceeds as provided in Section 5.4, and the Owner refuses the payment or the Surety has denied liability, in whole or in part, without further notice the Owner shall be entitled to enforce any remedy available to the Owner.

§ 7 If the Surety elects to act under Section 5.1, 5.2 or 5.3, then the responsibilities of the Surety to the Owner shall not be greater than those of the Contractor under the Construction Contract, and the responsibilities of the Owner to

AIA Document A312 – 2010 Performance Bond. Copyright © 2010. All rights reserved. "The American Institute of Architects," "American Institute of Architects," "AIA," the AIA Logo, and "AIA Contract Documents" are trademarks of The American Institute of Architects. This draft was produced at 13:14:40 CT on 07/21/2023 under Order No.2114349659 which expires on 08/06/2023, is not for resale, is licensed for one-time use only, and may only be used in accordance with the AIA Contract Documents® Terms of Service. To report copyright violations, e-mail docinfo@aiacontracts.com.
User Notes: (1936224050)

the Surety shall not be greater than those of the Owner under the Construction Contract. Subject to the commitment by the Owner to pay the Balance of the Contract Price, the Surety is obligated, without duplication, for

.1 the responsibilities of the Contractor for correction of defective work and completion of the Construction Contract;

.2 additional legal, design professional and delay costs resulting from the Contractor's Default, and resulting from the actions or failure to act of the Surety under Section 5; and

.3 liquidated damages, or if no liquidated damages are specified in the Construction Contract, actual damages caused by delayed performance or non-performance of the Contractor.

§ 8 If the Surety elects to act under Section 5.1, 5.3 or 5.4, the Surety's liability is limited to the amount of this Bond.

§ 9 The Surety shall not be liable to the Owner or others for obligations of the Contractor that are unrelated to the Construction Contract, and the Balance of the Contract Price shall not be reduced or set off on account of any such unrelated obligations. No right of action shall accrue on this Bond to any person or entity other than the Owner or its heirs, executors, administrators, successors and assigns.

§ 10 The Surety hereby waives notice of any change, including changes of time, to the Construction Contract or to related subcontracts, purchase orders and other obligations.

§ 11 Any proceeding, legal or equitable, under this Bond may be instituted in any court of competent jurisdiction in the location in which the work or part of the work is located and shall be instituted within two years after a declaration of Contractor Default or within two years after the Contractor ceased working or within two years after the Surety refuses or fails to perform its obligations under this Bond, whichever occurs first. If the provisions of this Paragraph are void or prohibited by law, the minimum period of limitation available to sureties as a defense in the jurisdiction of the suit shall be applicable.

§ 12 Notice to the Surety, the Owner or the Contractor shall be mailed or delivered to the address shown on the page on which their signature appears.

§ 13 When this Bond has been furnished to comply with a statutory or other legal requirement in the location where the construction was to be performed, any provision in this Bond conflicting with said statutory or legal requirement shall be deemed deleted herefrom and provisions conforming to such statutory or other legal requirement shall be deemed incorporated herein. When so furnished, the intent is that this Bond shall be construed as a statutory bond and not as a common law bond.

§ 14 Definitions

§ 14.1 Balance of the Contract Price. The total amount payable by the Owner to the Contractor under the Construction Contract after all proper adjustments have been made, including allowance to the Contractor of any amounts received or to be received by the Owner in settlement of insurance or other claims for damages to which the Contractor is entitled, reduced by all valid and proper payments made to or on behalf of the Contractor under the Construction Contract.

§ 14.2 Construction Contract. The agreement between the Owner and Contractor identified on the cover page, including all Contract Documents and changes made to the agreement and the Contract Documents.

§ 14.3 Contractor Default. Failure of the Contractor, which has not been remedied or waived, to perform or otherwise to comply with a material term of the Construction Contract.

§ 14.4 Owner Default. Failure of the Owner, which has not been remedied or waived, to pay the Contractor as required under the Construction Contract or to perform and complete or comply with the other material terms of the Construction Contract.

§ 14.5 Contract Documents. All the documents that comprise the agreement between the Owner and Contractor.

§ 15 If this Bond is issued for an agreement between a Contractor and subcontractor, the term Contractor in this Bond shall be deemed to be Subcontractor and the term Owner shall be deemed to be Contractor.

AIA Document A312 – 2010 Performance Bond. Copyright © 2010. All rights reserved. "The American Institute of Architects," "American Institute of Architects," "AIA," the AIA Logo, and "AIA Contract Documents" are trademarks of The American Institute of Architects. This draft was produced at 13:14:40 CT on 07/21/2023 under Order No.2114349659 which expires on 08/06/2023, is not for resale, is licensed for one-time use only, and may only be used in accordance with the AIA Contract Documents® Terms of Service. To report copyright violations, e-mail docinfo@aiacontracts.com.
User Notes: (1936224050)

§ 16 Modifications to this bond are as follows:

« »

(Space is provided below for additional signatures of added parties, other than those appearing on the cover page.)

CONTRACTOR AS PRINCIPAL		**SURETY**	
Company:	*(Corporate Seal)*	Company:	*(Corporate Seal)*
Signature:		Signature:	
Name and Title:	« »« »	Name and Title:	« »« »
Address:	« »	Address:	« »

DRAFT

AIA Document A312 – 2010 Performance Bond. Copyright © 2010. All rights reserved. "The American Institute of Architects," "American Institute of Architects," "AIA," the AIA Logo, and "AIA Contract Documents" are trademarks of The American Institute of Architects. This draft was produced at 13:14:40 CT on 07/21/2023 under Order No.2114349659 which expires on 08/06/2023, is not for resale, is licensed for one-time use only, and may only be used in accordance with the AIA Contract Documents® Terms of Service. To report copyright violations, e-mail docinfo@aiacontracts.com.
User Notes: (1936224050)

SECTION 00601

INSURANCE AND BOND CHECK LIST

Upon acceptance of bids by the Owner, a completed Construction Contract Agreement between owner and contractor will be delivered to the successful contractor. The following insurance certificates and bonds must be completed and returned with the signed copies of the Contract, within seven days, in order to be considered for execution. This completed checklist must be attached to your company transmittal and returned with the contracts with all the check boxes completed certifying that the required insurance certificates and bonds are complete and included. Include contact information from Bonding Company completing the checklist.

- ❑ **Contract Bonds in accordance with Specification Section 00600. <u>Number of originals needed (3).</u>**
  - ❑ Name and Phone Number of Agency Contact:

    _____

    _____
- ❑ **Certificate of Commercial General Liability (CGL) policy in accordance with Article 11.1 of the General Conditions with Owner and Architect named as additional insured under CGL. <u>Number of originals needed (3).</u>**
  - ❑ Name and Phone Number of Agency Contact:

    _____

    _____
- ❑ **Certificate of Business Auto and Umbrella Insurance in accordance with 11.2.1 of the General Conditions. <u>Number of originals needed (3).</u>**
  - ❑ Name and Phone Number of Agency Contact:

    _____

    _____
- ❑ **Certificate of Workers Compensation Insurance in accordance with Articles 11.5 through 11.7.3 of the General Conditions. <u>Number of originals needed (3).</u>**
  - ❑ Name and Phone Number of Agency Contact:

    _____

    _____

Contact Information of individual completing checklist:

_____
(name)

_____
(company)

_____
(phone and fax number)

SECTION 00700

GENERAL CONDITIONS

1.1 SUMMARY

A. Document Includes:
   1. General Conditions.

B. Related Documents:

1.2 GENERAL CONDITIONS

A. AIA Document A201-2007, General Conditions of the Contract for Construction, is the General Conditions of the Contract. The General Conditions (AIA Documents A-201), 2007 Edition, entitled "General Conditions of the Contract for Construction", in its entirety are a part of these specifications whether bound herein or not. All sections in this specification are subject to the conditions specifically set forth in the above AIA General Conditions

   1. A copy of the AIA Document is available for review at the office of the Architect.
   2. Only those copies of the specifications being used for legal or contract purposes are intended to have the above printed AIA General Conditions Document A-201, 2007 Edition, bound within. However, if the printed AIA General Conditions are inadvertently omitted from any such copy it shall be no less binding than in included therein.
   3. The Contractor is hereby specifically directed, as a condition of the Contract, to obtain the necessary number of copies of Document A-201, acquaint himself with the Articles contained therein and to notify and appraise all subcontractors, suppliers and any other parties to the Contract or individuals or agencies engaged on the work as to its contents.
   4. No contractual adjustments shall be due or become exigent as a result of failure on the part of the contractor to fully acquaint himself and all other parties to the contract with the conditions of Document A-201.
   5. Where the Supplementary General Conditions or other special Conditions conflict with or contradict the above General Conditions, the Supplementary and the Special Conditions are to take precedence. Only that portion of the General Conditions specifically mentioned in the Supplementary Conditions shall be changed.

1.3 SUPPLEMENTARY CONDITIONS

A. Refer to Document 00701 for modifications to General Conditions.

END OF DOCUMENT

SECTION 00701

SUPPLEMENTARY CONDITIONS

These Supplementary Conditions modify, change, delete from or add to the General Conditions of the Contract for Construction, AIA Document A201, 2017 Edition. Where any Article of the General Conditions is modified or any Paragraph, Subparagraph or Clause thereof is modified or deleted by these supplements, the unaltered provisions of that Article, Paragraph, Subparagraph or Clause shall remain in effect.

Articles, Paragraphs, Subparagraphs or Clauses modified or deleted have the same numerical designation as those occurring in the General Conditions.

ARTICLE 1 GENERAL PROVISIONS

§ 1.1 BASIC DEFINITIONS

1.1.1. THE CONTRACT DOCUMENTS

In Subparagraph 1.1.1 delete the third sentence, and add the following sentence:

"The Contract Documents shall include the Bid Documents as listed in the Instructions to Bidders and any modifications made thereto by addenda. This also includes the: Notice to Contractors, Instruction to Bidders, Bid Form, Bid Bond Form, Notice to Proceed form."

ARTICLE 3 CONTRACTOR

§ 3.6 TAXES

Replace the paragraph with the following:

SALES AND USE TAX EXEMPTION

City of Loxley has stated that the project will be tax exempt.

ARTICLE 13 MISCELLANEOUS PROVISIONS

§ 13.1 GOVERNING LAW

Add the following statement to the end of the paragraph:

"By signing this contract, the contracting parties affirm, for the duration of the agreement, that they will not violate federal immigration law or knowingly employ, hire for employment, or continue to employ an unauthorized alien within the State of Alabama. Furthermore, a contracting party found to be in violation of this provision shall be deemed in breach of the agreement and shall be responsible for all damages resulting therefrom.

Contractor and each of its subcontractors shall at the outset of its performance under this contract, provide to **City of Loxley** appropriate documentation establishing that it is enrolled in the E-Verify program. During the performance of the contract, contractor and each of its subcontractors shall

participate in the E-Verify program and shall from time-to-time at reasonable times verify that every employee that is ***required*** to be verified according to the applicable federal rules and regulations, ***has been*** verified."

ARTICLE 15 CLAIMS AND DISPUTES

§ 15.1 CLAIMS

15.1.5.2 Replace the paragraph with the following:

Additional of Time for Adverse Weather Conditions: This provision specifies the procedure for determination of time extensions for unusually severe weather. All weather related time extensions shall be for time only and not compensable in any manner. In order for the Owner or Architect to award a non-compensable time extension under this clause, the following conditions must be satisfied:

- The weather experienced at the project site during the contract period must be found to be unusually severe than the adverse weather anticipated for the project location during any given month.

- The unusually severe weather must actually cause a delay to the completion of the project. The delay must be beyond the control and without the fault or negligence of the contractor.

- The unusually severe weather must exceed the average number of days per month for the five (5) previous years. Rainfall amounts must exceed two-tenths of an inch (0.20") during the twenty four hour period in order to be considered a rain day for purposes of determining the number of actual rain days per month.

Extensions on account of weather conditions will be considered only when such conditions were detrimental to progress, and are in excess of the monthly average for that period and could not have been reasonably anticipated. The following schedule shall be based on National Oceanic and Atmospheric Administration (NOAA) or similar data for the project location and will constitute the base line for monthly weather time evaluation.

Upon acknowledgment of the Notice to Proceed (NTP) and continuing throughout the contract, the Contractor shall record on the daily report, the occurrence of adverse weather and resultant impact to normally scheduled work. Actual adverse weather delay days must prevent work on the overall project's critical activities for 50 percent or more of the contractor's scheduled workday. The number of actual adverse weather days shall include days impacted by actual adverse weather (even if adverse weather occurred in previous month), be calculated chronologically from the first to the last day of each month, and be recorded as full days. If the number of actual adverse weather delay days exceeds the number of days anticipated in paragraph b, above, the Owner and the Architect will convert any qualifying delays to calendar days, giving full consideration for equivalent fair weather work days, and issue a modification in accordance with the contract.

END OF DOCUMENT

NOTICE TO PROCEED

TO: _____

_____

_____

PROJECT: LOXLEY SECTION 5307 TRANSIT HUB PROJECT
Loxley, Alabama

You are hereby notified to commence work in accordance with the Contract Agreement on or before, _____, and you are to complete work within (**300)** calendar days, thereafter. The date of completion of all work is therefore, _____.

CITY OF LOXLEY
LOXLEY, ALABAMA

BY: _____

DATE: _____, 2023

ACCEPTANCE OF NOTICE

Receipt of the above NOTICE TO PROCEED is hereby acknowledged by:

Contractor:

DATE: _____ , 2023

BY: _____

TITLE: _____

(Please return one executed copy to WHLC Architecture)

CONSTRUCTION CONTRACT AGREEMENT

THIS AGREEMENT, made and entered into on this the ____ day of _____ in the year of **2023**, by and between **City of Loxley, AL** (hereinafter called the Owner), and _____ (hereinafter called the Contractor).

WITNESSETH: that the Owner and Contractor, in consideration of the mutual covenants hereinafter set forth, agree as follows:

1. ***Contract Scope of Work*:** This Contract shall include the performance of any and all work, and the furnishing of all labor, materials, supplies, fuels, oils, tools, and equipment to completely install and fully complete the project entitled **Loxley Section 5307 Transit Hub**, the total cost of which shall be the full responsibility of the Contractor. The Contractor hereby agrees that the entire project shall be completed in accordance with the Specifications, and in adherence with the provisions of the Contract Documents as defined, all of which form this Contract.
2. ***Contract Documents*:** The Contract Documents shall include:
    - The Construction Contract Agreement is this executed document.
    - Construction Drawings, dated July, 2023
    - Project Manual & Specifications, dated July, 2023
    - General Conditions of the Contract (AIA Document A201)
    - Supplementary Conditions
    - All Contract Addenda.
3. ***Price of Contract*:** Payment in full amount of the price or prices in the Proposal submitted by the Contractor shall be due the Contractor by the Owner for performance of work under this Contract. The referenced Proposal is bound herewith and made a part hereof to the same extent as if fully contained herein, but subject to such additions and/or deductions as provided for into the Contract Documents. As noted in the Proposal, the full amount of the price or prices set forth is $_____ . It is understood and agreed by both the Owner and the Contractor that should the Owner order any changes in the work, the Contract price shall be equitably adjusted to compensate for said changes.
4. ***E-Verify Program*:** By signing this contract, the contracting parties affirm, for the duration of the agreement, that they will not violate federal immigration law or knowingly employ, hire for employment, or continue to employ an unauthorized alien within the State of Alabama. Furthermore, a contracting party found to be in violation of this provision shall be deemed in breach of the agreement and shall be responsible for all

damages resulting therefore. Contractor and each of its subcontractors shall at the outset of its performance under this contract, provide to the owner appropriate documentation establishing that it is enrolled in the E-Verify program. During the performance of the contract, contractor and each of its subcontractors shall participate in the E-Verify program and shall from time-to-time at reasonable times verify that every employee that is **required** to be verified according to the applicable federal rules and regulations, **has been** verified.

THE WORK to be performed under this Contract shall be commenced within 10 Calendar days after the date on which the Notice to Proceed is issued, and the work shall be fully completed at the end of **(300)** calendar days after the date on which the **Notice to Proceed** is issued, subject to such extension of time may be granted in accordance with the provisions of the Contract Documents

IN WITNESS HEREOF, the Parties hereto have executed this Agreement on the day and date first above written.

CITY OF LOXLEY, AL **CONTRACTOR**

BY: _____ _____

ATTEST: _____ _____

"General Decision Number: AL20230083 03/17/2023

Superseded General Decision Number: AL20220083

State: Alabama

Construction Type: Building
BUILDING CONSTRUCTION PROJECTS (does not include single family homes or apartments up to and including 4 stories)

County: Baldwin County in Alabama.

BUILDING CONSTRUCTION PROJECTS (does not include single family homes or apartments up to and including 4 stories).

Note: Contracts subject to the Davis-Bacon Act are generally required to pay at least the applicable minimum wage rate required under Executive Order 14026 or Executive Order 13658. Please note that these Executive Orders apply to covered contracts entered into by the federal government that are subject to the Davis-Bacon Act itself, but do not apply to contracts subject only to the Davis-Bacon Related Acts, including those set forth at 29 CFR 5.1(a)(2)-(60).

If the contract is entered into on or after January 30, 2022, or the contract is renewed or extended (e.g., an option is exercised) on or after January 30, 2022:	. Executive Order 14026 generally applies to the contract. . The contractor must pay all covered workers at least $16.20 per hour (or the applicable wage rate listed on this wage determination, if it is higher) for all hours spent performing on the contract in 2023.
If the contract was awarded on or between January 1, 2015 and January 29, 2022, and the contract is not renewed or extended on or after January 30, 2022:	. Executive Order 13658 generally applies to the contract. . The contractor must pay all covered workers at least $12.15 per hour (or the applicable wage rate listed on this wage determination, if it is higher) for all hours spent performing on that contract in 2023.

The applicable Executive Order minimum wage rate will be adjusted annually. If this contract is covered by one of the Executive Orders and a classification considered necessary for performance of work on the contract does not appear on this wage determination, the contractor must still submit a conformance request.

Additional information on contractor requirements and worker protections under the Executive Orders is available at http://www.dol.gov/whd/govcontracts.

Modification Number	Publication Date
0	01/06/2023
1	03/17/2023

ASBE0078-001 09/30/2022

	Rates	Fringes
ASBESTOS WORKER/HEAT & FROST INSULATOR	$ 29.65	15.11

BOIL0108-001 01/01/2021

	Rates	Fringes
BOILERMAKER	$ 30.49	23.13

ELEC0505-002 09/01/2021

	Rates	Fringes
ELECTRICIAN	$ 28.55	3%+8.86

ENGI0653-017 10/01/2016

	Rates	Fringes
POWER EQUIPMENT OPERATOR		
Bulldozer	$ 25.45	12.08
Crane	$ 27.30	12.08

PLUM0119-001 07/22/2021

	Rates	Fringes
PLUMBER	$ 30.45	12.56

* SHEE0441-009 07/01/2022

	Rates	Fringes
SHEET METAL WORKER (Includes HVAC Duct Installation)	$ 26.22	13.89

* SUAL2015-011 08/02/2017

	Rates	Fringes
BRICKLAYER	$ 19.81	0.00
CARPENTER, Includes Form Work	$ 17.37	0.00
CEMENT MASON/CONCRETE FINISHER	$ 16.00 **	0.00
IRONWORKER, REINFORCING	$ 22.86	7.94
IRONWORKER, STRUCTURAL	$ 19.73	1.15
LABORER: Common or General	$ 12.31 **	0.00
LABORER: Mason Tender - Brick	$ 11.00 **	0.00
LABORER: Mason Tender - Cement/Concrete	$ 12.16 **	0.00

LABORER: Pipelayer.....$ 12.58 ** 0.00

OPERATOR:
Backhoe/Excavator/Trackhoe.....$ 20.23 11.78

OPERATOR: Forklift.....$ 20.69 0.00

OPERATOR: Grader/Blade.....$ 17.52 0.89

OPERATOR: Loader.....$ 14.69 ** 0.00

OPERATOR: Roller.....$ 14.00 ** 1.78

PAINTER (Brush and Roller).....$ 15.41 ** 0.00

PAINTER: Spray.....$ 14.31 ** 0.00

PIPEFITTER.....$ 20.78 5.04

ROOFER.....$ 13.61 ** 0.00

SPRINKLER FITTER (Fire
Sprinklers).....$ 21.50 0.00

TILE SETTER.....$ 15.86 ** 0.00

TRUCK DRIVER: Dump Truck.....$ 13.18 ** 0.00

WELDERS - Receive rate prescribed for craft performing operation to which welding is incidental.

==========

** Workers in this classification may be entitled to a higher minimum wage under Executive Order 14026 ($16.20) or 13658 ($12.15). Please see the Note at the top of the wage determination for more information.

Note: Executive Order (EO) 13706, Establishing Paid Sick Leave for Federal Contractors applies to all contracts subject to the Davis-Bacon Act for which the contract is awarded (and any solicitation was issued) on or after January 1, 2017. If this contract is covered by the EO, the contractor must provide employees with 1 hour of paid sick leave for every 30 hours they work, up to 56 hours of paid sick leave each year. Employees must be permitted to use paid sick leave for their own illness, injury or other health-related needs, including preventive care; to assist a family member (or person who is like family to the employee) who is ill, injured, or has other health-related needs, including preventive care; or for reasons resulting from, or to assist a family member (or person who is like family to the employee) who is a victim of, domestic violence, sexual assault, or stalking. Additional information on contractor requirements and worker protections under the EO is available at
https://www.dol.gov/agencies/whd/government-contracts.

Unlisted classifications needed for work not included within the scope of the classifications listed may be added after award only as provided in the labor standards contract clauses (29CFR 5.5 (a) (1) (ii)).

The body of each wage determination lists the classification and wage rates that have been found to be prevailing for the cited type(s) of construction in the area covered by the wage determination. The classifications are listed in alphabetical order of ""identifiers"" that indicate whether the particular rate is a union rate (current union negotiated rate for local), a survey rate (weighted average rate) or a union average rate (weighted union average rate).

Union Rate Identifiers

A four letter classification abbreviation identifier enclosed in dotted lines beginning with characters other than ""SU"" or ""UAVG"" denotes that the union classification and rate were prevailing for that classification in the survey. Example: PLUM0198-005 07/01/2014. PLUM is an abbreviation identifier of the union which prevailed in the survey for this classification, which in this example would be Plumbers. 0198 indicates the local union number or district council number where applicable, i.e., Plumbers Local 0198. The next number, 005 in the example, is an internal number used in processing the wage determination. 07/01/2014 is the effective date of the most current negotiated rate, which in this example is July 1, 2014.

Union prevailing wage rates are updated to reflect all rate changes in the collective bargaining agreement (CBA) governing this classification and rate.

Survey Rate Identifiers

Classifications listed under the ""SU"" identifier indicate that no one rate prevailed for this classification in the survey and the published rate is derived by computing a weighted average rate based on all the rates reported in the survey for that classification. As this weighted average rate includes all rates reported in the survey, it may include both union and non-union rates. Example: SULA2012-007 5/13/2014. SU indicates the rates are survey rates based on a weighted average calculation of rates and are not majority rates. LA indicates the State of Louisiana. 2012 is the year of survey on which these classifications and rates are based. The next number, 007 in the example, is an internal number used in producing the wage determination. 5/13/2014 indicates the survey completion date for the classifications and rates under that identifier.

Survey wage rates are not updated and remain in effect until a new survey is conducted.

Union Average Rate Identifiers

Classification(s) listed under the UAVG identifier indicate that no single majority rate prevailed for those classifications; however, 100% of the data reported for the classifications was union data. EXAMPLE: UAVG-OH-0010 08/29/2014. UAVG indicates that the rate is a weighted union average rate. OH indicates the state. The next number, 0010 in the example, is an internal number used in producing the wage determination. 08/29/2014 indicates the survey completion date for the classifications and rates under that identifier.

A UAVG rate will be updated once a year, usually in January of each year, to reflect a weighted average of the current

negotiated/CBA rate of the union locals from which the rate is based.

WAGE DETERMINATION APPEALS PROCESS

1.) Has there been an initial decision in the matter? This can be:

* an existing published wage determination
* a survey underlying a wage determination
* a Wage and Hour Division letter setting forth a position on a wage determination matter
* a conformance (additional classification and rate) ruling

On survey related matters, initial contact, including requests for summaries of surveys, should be with the Wage and Hour National Office because National Office has responsibility for the Davis-Bacon survey program. If the response from this initial contact is not satisfactory, then the process described in 2.) and 3.) should be followed.

With regard to any other matter not yet ripe for the formal process described here, initial contact should be with the Branch of Construction Wage Determinations. Write to:

Branch of Construction Wage Determinations
Wage and Hour Division
U.S. Department of Labor
200 Constitution Avenue, N.W.
Washington, DC 20210

2.) If the answer to the question in 1.) is yes, then an interested party (those affected by the action) can request review and reconsideration from the Wage and Hour Administrator (See 29 CFR Part 1.8 and 29 CFR Part 7). Write to:

Wage and Hour Administrator
U.S. Department of Labor
200 Constitution Avenue, N.W.
Washington, DC 20210

The request should be accompanied by a full statement of the interested party's position and by any information (wage payment data, project description, area practice material, etc.) that the requestor considers relevant to the issue.

3.) If the decision of the Administrator is not favorable, an interested party may appeal directly to the Administrative Review Board (formerly the Wage Appeals Board). Write to:

Administrative Review Board
U.S. Department of Labor
200 Constitution Avenue, N.W.
Washington, DC 20210

4.) All decisions by the Administrative Review Board are final.

==========

END OF GENERAL DECISIO"

Federal Clauses

ACCESS TO RECORDS AND REPORTS

a. Record Retention. The Contractor will retain, and will require its subcontractors of all tiers to retain, complete and readily accessible records related in whole or in part to the contract, including, but not limited to, data, documents, reports, statistics, leases, subcontracts, arrangements, other third party Contracts of any type, and supporting materials related to those records.

b. Retention Period. The Contractor agrees to comply with the record retention requirements in accordance with 2 C.F.R. § 200.333. The Contractor shall maintain all books, records, accounts and reports required under this Contract for a period of at not less than three (3) years after the date of termination or expiration of this Contract, except in the event of litigation or settlement of claims arising from the performance of this Contract, in which case records shall be maintained until the disposition of all such litigation, appeals, claims or exceptions related thereto.

c. Access to Records. The Contractor agrees to provide sufficient access to FTA and its contractors to inspect and audit records and information related to performance of this contract as reasonably may be required.

d. Access to the Sites of Performance. The Contractor agrees to permit FTA and its contractors access to the sites of performance under this contract as reasonably may be required.

AMERICANS WITH DISABILITIES ACT(ADA)

The contractor agrees to comply with the requirements of 49 U.S.C. § 5301 (d), which states the Federal policy that the elderly and persons with disabilities have the same right as other persons to use mass transportation service and facilities, and that special efforts shall be made in planning and designing those services and facilities to implement that policy. The contractor also agrees to comply with all applicable requirements of section 504 of the Rehabilitation Act of 1973, as amended, 29 U.S.C. § 794, which prohibits discrimination on the basis of handicaps, with the Americans with Disabilities Act of 1990 (ADA), as amended, 42 U.S.C. §§ 12101 et seq., which requires that accessible facilities and services be made available to persons with disabilities, including any subsequent amendments to that Act, and with the Architectural Barriers act of 1968, as amended, 42 U.S.C. §§ 4151 et seq., which requires that buildings and public accommodations be accessible to persons with disabilities, including any subsequent amendments to that Act. In addition, the contractor agrees to comply with any and all applicable requirements issued by the FTA, DOT, DOJ, U.S. GSA, U.S. EEOC, U.S. FCC, any subsequent amendments thereto and any other nondiscrimination statute(s) that may apply to the Project.

BYRD ANTI-LOBBYING AMENDMENT

Contractors who apply or bid for an award of $100,000 or more shall file the required certification. Each tier certifies to the tier above that it will not and has not used Federal appropriated funds to pay any person or organization for influencing or attempting to influence an officer or employee of any agency, a member of Congress, officer or employee of Congress, or an employee of a member of Congress in connection with obtaining any Federal contract, grant, or any other award covered by 31 U.S.C. § 1352. Each tier shall also disclose any lobbying with non-Federal funds that takes place in connection with obtaining any Federal award. Such disclosures are forwarded from tier to tier up to the Agency."

BOND REQUIREMENTS

Bid Guarantee. Bidders shall furnish a bid guaranty in the form of a bid bond, or certified treasurer's or cashier's check issued by a responsible bank or trust company, made payable to the Agency. The amount of such guaranty shall be equal to the value or a percentage of the total bid price.

In submitting this bid, it is understood and agreed by bidder that the Agency reserves the right to reject any and all bids, or part of any bid, and it is agreed that the Bid may not be withdrawn for a period of [90] days subsequent to the opening of bids, without the written consent of Agency.

It is also understood and agreed that if the undersigned bidder should withdraw any part or all of their bid within [90] days after the bid opening without the written consent of the Agency, or refuse or be unable to enter into this Contract as provided above, or refuse or be unable to furnish adequate and acceptable Performance and Payment Bonds, or refuse or be unable to furnish adequate and acceptable insurance, as provided above, it shall forfeit its bid guaranty to the extent Agency's damages occasioned by such withdrawal, or refusal, or inability to enter into a Contract, or provide adequate security thereof.

It is further understood and agreed that to the extent the defaulting bidder's bid guaranty shall prove inadequate to fully recompense Agency for the damages occasioned by default, then the undersigned bidder agrees to indemnify Agency and pay over to Agency the difference between the bid guarantee and Agency's total damages so as to make Agency whole.

The undersigned understands that any material alteration of any of the above or any of the material contained herein, other than that requested will render the bid unresponsive.

Performance Guarantee. A Performance Guarantee in the amount of 100% of the Contract value is required by the Agency to ensure faithful performance of the Contract. Either a Performance Bond or an Irrevocable Stand-By Letter of Credit shall be provided by the Contractor and shall remain in full force for the term of the Contract. The successful Bidder shall certify that it will provide the requisite Performance Guarantee to the Agency within ten (10) business days from Contract execution. The Agency requires all Performance Bonds to be provided by a fully qualified surety company acceptable to the Agency and listed as a company currently authorized under 31 C.F.R. part 22 as possessing a Certificate of Authority as described hereunder. Agency may require additional performance bond protection when the contract price is increased. The increase in protection shall generally equal 100 percent of the increase in contract price. The Agency may secure additional protection by directing the Contractor to increase the amount of the existing bond or to obtain an additional bond.

If the Bidder chooses to provide a Letter of Credit as its Performance Guarantee, the Bidder shall furnish with its bid, certification that an Irrevocable Stand-By Letter of Credit will be furnished should the Bidder become the successful Contractor. The Bidder shall also provide a statement from the banking institution certifying that an Irrevocable Stand-By Letter of Credit for the action will be provided if the Contract is awarded to the Bidder. The Irrevocable Stand-By Letter of Credit will only be accepted by the Agency if:

1. A bank in good standing issues it. The Agency will not accept a Letter of Credit from an entity other than a bank.
2. It is in writing and signed by the issuing bank.
3. It conspicuously states that it is an irrevocable, non-transferable, "standby" Letter of Credit.
4. The Agency is identified as the Beneficiary.
5. It is in an amount equal to 100% of the Contract value. This amount must be in U.S. dollars.

6. The effective date of the Letter of Credit is the same as the effective date of the Contract
7. The expiration date of the Letter of Credit coincides with the term of the contract.
8. It indicates that it is being issued in order to support the obligation of the Contractor to perform under the Contract. It must specifically reference the Contract between the Agency and the Contractor the work stipulated herein.

The issuing bank's obligation to pay will arise upon the presentation of the original Letter of Credit and a certificate and draft to the issuing bank's representative at a location and time to be determined by the parties. This documentation will indicate that the Contractor is in default under the Contract.

Payment Bonds. A Labor and Materials Payment Bond equal to the full value of the contract must be furnished by the contractor to Agency as security for payment by the Contractor and subcontractors for labor, materials, and rental of equipment. The bond may be issued by a fully qualified surety company acceptable to (Agency) and listed as a company currently authorized under 31 C.F.R. part 223 as possessing a Certificate of Authority as described thereunder.

BUY AMERICA REQUIREMENTS

The contractor agrees to comply with 49 U.S.C. 5323(j) and 49 C.F.R. part 661 and 2 CFR § 200.322 Domestic preferences for procurements, which provide that Federal funds may not be obligated unless all steel, iron, and manufactured products used in FTA funded projects are produced in the United States, unless a waiver has been granted by FTA or the product is subject to a general waiver. General waivers are listed in 49 C.F.R. § 661.7. Separate requirements for rolling stock are set out at 49 U.S.C. 5323(j)(2)(C), 49 U.S.C. § 5323(u) and 49 C.F.R. § 661.11. The bidder or offeror must submit to the Agency the appropriate Buy America certification. Bids or offers that are not accompanied by a completed Buy America certification will be rejected as nonresponsive.

CLEAN AIR ACT AND FEDERAL WATER POLLUTION CONTROL ACT

The Contractor agrees to comply with all applicable standards, orders, or regulations issued pursuant to the Clean Air Act (42 U.S.C. § 7401-7671q) and the Federal Water Pollution Control Act as amended (33 U.S.C. § 1251-1387). Violations must be reported to FTA and the Regional Office of the Environmental Protection Agency. The following applies for contracts of amounts in excess of $150,000:

Clean Air Act

(1) The contractor agrees to comply with all applicable standards, orders or regulations issued pursuant to the Clean Air Act, as amended, 42 U.S.C. § 7401 et seq.

(2) The contractor agrees to report each violation to the Agency and understands and agrees that the Agency will, in turn, report each violation as required to assure notification to the Agency, Federal Emergency Management Agency, and the appropriate Environmental Protection Agency Regional Office.

(3) The contractor agrees to include these requirements in each subcontract exceeding $150,000 financed in whole or in part with Federal assistance provided by FTA.

Federal Water Pollution Control Act

(1) The contractor agrees to comply with all applicable standards, orders or regulations issued pursuant to the Federal Water Pollution Control Act, as amended, 33 U.S.C. 1251 et seq.

(2) The contractor agrees to report each violation to the Agency and understands and agrees that the Agency will, in turn, report each violation as required to assure notification to the Agency, Federal Emergency Management Agency, and the appropriate Environmental Protection Agency Regional Office.

(3) The contractor agrees to include these requirements in each subcontract exceeding $150,000 financed in whole or in part with Federal assistance provided by FTA."

CARGO PREFERENCE REQUIREMENTS

The contractor agrees:
a. to use privately owned United States-Flag commercial vessels to ship at least 50 percent of the gross tonnage (computed separately for dry bulk carriers, dry cargo liners, and tankers) involved, whenever shipping any equipment, material, or commodities pursuant to the underlying contract to the extent such vessels are available at fair and reasonable rates for United States-Flag commercial vessels;

b. to furnish within 20 working days following the date of loading for shipments originating within the United States or within 30 working days following the date of loading for shipments originating outside the United States, a legible copy of a rated, "on-board" commercial ocean bill-of-lading in English for each shipment of cargo described in the preceding paragraph to the Division of National Cargo, Office of Market Development, Maritime Administration, Washington, DC 20590 and to the FTA Recipient (through the contractor in the case of a subcontractor's bill-of-lading.); and

c. to include these requirements in all subcontracts issued pursuant to this contract when the subcontract may involve the transport of equipment, material, or commodities by ocean vessel.

CIVIL RIGHTS LAWS AND REGULATIONS

The following Federal Civil Rights laws and regulations apply to all contracts.

1 Federal Equal Employment Opportunity (EEO) Requirements. These include, but are not limited to:

a) Nondiscrimination in Federal Public Transportation Programs. 49 U.S.C. § 5332, covering projects, programs, and activities financed under 49 U.S.C. Chapter 53, prohibits discrimination on the basis of race, color, religion, national origin, sex (including sexual orientation and gender identity), disability, or age, and prohibits discrimination in employment or business opportunity.

b) Prohibition against Employment Discrimination. Title VII of the Civil Rights Act of 1964, as amended, 42 U.S.C. § 2000e, and Executive Order No. 11246, "Equal Employment Opportunity," September 24, 1965, as amended, prohibit discrimination in employment on the basis of race, color, religion, sex, or national origin.

2 Nondiscrimination on the Basis of Sex. Title IX of the Education Amendments of 1972, as amended, 20 U.S.C. § 1681 et seq. and implementing Federal regulations, "Nondiscrimination on the Basis of Sex in Education Programs or Activities Receiving Federal Financial Assistance," 49 C.F.R. part 25

prohibit discrimination on the basis of sex.

3 Nondiscrimination on the Basis of Age. The "Age Discrimination Act of 1975," as amended, 42 U.S.C. § 6101 et seq., and Department of Health and Human Services implementing regulations, "Nondiscrimination on the Basis of Age in Programs or Activities Receiving Federal Financial Assistance," 45 C.F.R. part 90, prohibit discrimination by participants in federally assisted programs against individuals on the basis of age. The Age Discrimination in Employment Act (ADEA), 29 U.S.C. § 621 et seq., and Equal Employment Opportunity Commission (EEOC) implementing regulations, "Age Discrimination in Employment Act," 29 C.F.R. part 1625, also prohibit employment discrimination against individuals age 40 and over on the basis of age.

4 Federal Protections for Individuals with Disabilities. The Americans with Disabilities Act of 1990, as amended (ADA), 42 U.S.C. § 12101 et seq., prohibits discrimination against qualified individuals with disabilities in programs, activities, and services, and imposes specific requirements on public and private entities. Third party contractors must comply with their responsibilities under Titles I, II, III, IV, and V of the ADA in employment, public services, public accommodations, telecommunications, and other provisions, many of which are subject to regulations issued by other Federal agencies.

Civil Rights and Equal Opportunity

The Agency is an Equal Opportunity Employer. As such, the Agency agrees to comply with all applicable Federal civil rights laws and implementing regulations. Apart from inconsistent requirements imposed by Federal laws or regulations, the Agency agrees to comply with the requirements of 49 U.S.C. § 5323(h) (3) by not using any Federal assistance awarded by FTA to support procurements using exclusionary or discriminatory specifications. Under this Contract, the Contractor shall at all times comply with the following requirements and shall include these requirements in each subcontract entered into as part thereof.

1. Nondiscrimination. In accordance with Federal transit law at 49 U.S.C. § 5332, the Contractor agrees that it will not discriminate against any employee or applicant for employment because of race, color, religion, national origin, sex, disability, or age. In addition, the Contractor agrees to comply with applicable Federal implementing regulations and other implementing requirements FTA may issue.

2. Race, Color, Religion, National Origin, Sex. In accordance with Title VII of the Civil Rights Act, as amended, 42 U.S.C. § 2000e et seq., and Federal transit laws at 49 U.S.C. § 5332, the Contractor agrees to comply with all applicable equal employment opportunity requirements of U.S. Department of Labor (U.S. DOL) regulations, "Office of Federal Contract Compliance Programs, Equal Employment Opportunity, Department of Labor," 41 C.F.R. chapter 60, and Executive Order No. 11246, "Equal Employment Opportunity in Federal Employment," September 24, 1965, 42 U.S.C. § 2000e note, as amended by any later Executive Order that amends or supersedes it, referenced in 42 U.S.C. § 2000e note. The Contractor agrees to take affirmative action to ensure that applicants are employed, and that employees are treated during employment, without regard to their race, color, religion, national origin, or sex (including sexual orientation and gender identity). Such action shall include, but not be limited to, the following: employment, promotion, demotion or transfer, recruitment or recruitment advertising, layoff or termination; rates of pay or other forms of compensation; and selection for training, including apprenticeship. In addition, the Contractor agrees to comply with any implementing requirements FTA may issue.

3. Age. In accordance with the Age Discrimination in Employment Act, 29 U.S.C. §§ 621-634, U.S. Equal Employment Opportunity Commission (U.S. EEOC) regulations, "Age Discrimination in Employment Act," 29 C.F.R. part 1625, the Age Discrimination Act of 1975, as amended, 42 U.S.C. § 6101 et seq., U.S. Health and Human Services regulations, "Nondiscrimination on the Basis of Age in Programs or Activities Receiving Federal Financial Assistance," 45 C.F.R. part 90, and Federal transit law at 49 U.S.C. § 5332, the Contractor agrees to refrain from discrimination against present and prospective employees for reason of age. In addition, the Contractor agrees to comply with any Implementing requirements FTA may issue.

4.Disabilities. In accordance with section 504 of the Rehabilitation Act of 1973, as amended, 29 U.S.C. § 794, the Americans with Disabilities Act of 1990, as amended, 42 U.S.C. § 12101 et seq., the Architectural Barriers Act of 1968, as amended, 42 U.S.C. § 4151 et seq., and Federal transit law at 49 U.S.C. § 5332, the Contractor agrees that it will not discriminate against individuals on the basis of disability. In addition, the Contractor agrees to comply with any implementing requirements FTA may issue.

5.Promoting Free Speech and Religious Liberty. The Contractor shall ensure that Federal funding is expended in full accordance with the U.S. Constitution, Federal Law, and statutory and public policy requirements: including, but not limited to, those protecting free speech, religious liberty, public welfare, the environment, and prohibiting discrimination.

CONTRACT WORK HOURS AND SAFETY STANDARDS ACT

a. Applicability: This requirement applies to all FTA grant and cooperative agreement programs.

b. Where applicable (see 40 U.S.C. § 3701), all contracts awarded by the non-Federal entity in excess of $100,000 that involve the employment of mechanics or laborers must include a provision for compliance with 40 U.S.C. §§ 3702 and 3704, as supplemented by Department of Labor regulations at 29 C.F.R. Part 5. See 2 C.F.R. Part 200, Appendix II.

c. Under 40 U.S.C. § 3702, each contractor must be required to compute the wages of every mechanic and laborer on the basis of a standard work week of 40 hours. Work in excess of the standard work week is permissible provided that the worker is compensated at a rate of not less than one and a half times the basic rate of pay for all hours worked in excess of 40 hours in the work week.

d. The requirements of 40 U.S.C. § 3704 are applicable to construction work and provide that no laborer or mechanic must be required to work in surroundings or under working conditions which are unsanitary, hazardous or dangerous. These requirements do not apply to the purchases of supplies or materials or articles ordinarily available on the open market, or contracts for transportation or transmission of intelligence.

e. The regulation at 29 C.F.R. § 5.5(b) provides the required contract clause concerning compliance with the Contract Work Hours and Safety Standards Act:

Compliance with the Contract Work Hours and Safety Standards Act.

(1) Overtime requirements. No contractor or subcontractor contracting for any part of the contract work which may require or involve the employment of laborers or mechanics shall require or permit any such laborer or mechanic in any workweek in which he or she is employed on such work to work in excess of forty hours in such workweek unless such laborer or mechanic receives compensation at a rate not less than one and one-half times the basic rate of pay for all hours worked in excess of forty hours in such workweek.

(2) Violation; liability for unpaid wages; liquidated damages. In the event of any violation of the clause set forth in paragraph (1) of this section the contractor and any subcontractor responsible therefor shall be liable for the unpaid wages. In addition, such contractor and subcontractor shall be liable to the United States (in the case of work done under contract for the District of Columbia or a territory, to such District or to such territory), for liquidated damages. Such liquidated damages shall be computed with respect to each individual laborer or mechanic, including watchmen and guards, employed in violation of the clause set forth in paragraph (1) of this section, in the sum of $10 for each calendar day on which such individual was required or permitted to work in excess of the standard workweek of forty hours without payment of the overtime wages required by the clause set forth in paragraph (1) of this section.

(3) Withholding for unpaid wages and liquidated damages. The agency shall upon its own action or upon written request of an authorized representative of the Department of Labor withhold or cause to be withheld, from any moneys payable on account of work performed by the contractor or subcontractor under any such contract or any other Federal contract with the same prime contractor, or any other federally-assisted contract subject to the Contract Work Hours and Safety Standards Act, which is held by the same prime contractor, such sums as may be determined to be necessary to satisfy any liabilities of such contractor or subcontractor for unpaid wages and liquidated damages as provided in the clause set forth in paragraph (2) of this section.

(4) Subcontracts. The contractor or subcontractor shall insert in any subcontracts the clauses set forth in paragraph (1) through (4) of this section and also a clause requiring the subcontractors to include these clauses in any lower tier subcontracts. The prime contractor shall be responsible for compliance by any subcontractor or lower tier subcontractor with the clauses set forth in paragraphs (1) through (4) of this section."

CONFORMANCE WITH ITS NATIONAL ARCHITECTURE

Intelligent Transportation Systems (ITS) projects shall conform to the National ITS Architecture and standards. Conformance with the National ITS Architecture is interpreted to mean the use of the National ITS Architecture to develop a regional ITS architecture in support of integration and the subsequent adherence of all ITS projects to that regional ITS architecture. Development of the regional ITS architecture should be consistent with the transportation planning process for Statewide and Metropolitan Transportation Planning (49 CFR Part 613 and 621).

DEBARMENT AND SUSPENSION

a. Applicability: This requirement applies to all FTA grant and cooperative agreement programs for a contract in the amount of at least $25,000

(1) This contract is a covered transaction for purposes of 2 C.F.R. pt. 180 and 2 C.F.R. pt. 3000. As such the contractor is required to verify that none of the contractor, its principals (defined at 2 C.F.R. § 180.995), or its affiliates (defined at 2 C.F.R. § 180.905) are excluded (defined at 2 C.F.R. § 180.940) or disqualified (defined at 2 C.F.R. § 180.935).

(2) C.F.R. pt. 3000, subpart C and must include a requirement to comply with these regulations in any lower tier covered transaction it enters into.

(3) The accompanying certification is a material representation of fact relied upon by the subrecipient. If it is later determined that the contractor did not comply with 2 C.F.R. pt. 180, subpart C and 2 C.F.R. pt. 3000, subpart C, in addition to remedies available to the Agency and subrecipient, the Federal Government may pursue available remedies, including but not limited to suspension and/or debarment.

The bidder or proposer agrees to comply with the requirements of 2 C.F.R. pt. 180, subpart C and 2 C.F.R. pt. 3000, subpart C while this offer is valid and throughout the period of any contract that may arise from this offer. The bidder or proposer further agrees to include a provision requiring such compliance in its lower tier covered transactions."

DAVIS BACON ACT AND COPELAND ANTI-KICKBACK ACT

a. In accordance with the statute, contractors must be required to pay wages to laborers and mechanics at a rate not less than the prevailing wages specified in a wage determination made by the Secretary of Labor. In addition, contractors must be required to pay wages not less than once a week.

b. The Non-Federal entity must place a copy of the current prevailing wage determination issued by the Department of Labor in each solicitation. The decision to award a contract or subcontract must be conditioned upon the acceptance of the wage determination. The non-Federal entity must report all suspected or reported violations to the Federal awarding agency.

"Compliance with the Copeland "Anti-Kickback" Act.

(1) Contractor. The contractor shall comply with 18 U.S.C. § 874, 40 U.S.C. § 3145, and the requirements of 29 C.F.R. pt. 3 as may be applicable, which are

incorporated by reference into this contract.

(2) Subcontracts. The contractor or subcontractor shall insert in any subcontracts the clause above and such other clauses as the FTA may by appropriate instructions require, and also a clause requiring the subcontractors to include these clauses in any lower tier subcontracts. The prime contractor shall be responsible for the compliance by any subcontractor or lower tier subcontractor with all of these contract clauses.

(3) Breach. A breach of the contract clauses above may be grounds for termination of the contract, and for debarment as a contractor and subcontractor as provided in 29 C.F.R. § 5.12.

DISADVANTAGED BUSINESS ENTERPRISE (DBE)

The contractor or subcontractor shall not discriminate on the basis of race, color, national origin, or sex in the performance of this contract. The contractor shall carry out applicable requirements of 49 C.F.R. part 26 in the award and administration of DOT-assisted contracts. Failure by the contractor to carry out these requirements is a material breach of this contract, which may result in the termination of this contract or such other remedy as the Agency deems appropriate, which may include, but is not limited to:

(1) Withholding monthly progress payments; (2) Assessing sanctions; (3) Liquidated damages; and/or (4) Disqualifying the contractor from future bidding as non-responsible. 49 C.F.R. § 26.13(b).

Prime contractors are required to pay subcontractors for satisfactory performance of their contracts no later than 30 days from receipt of each payment the Agency makes to the prime contractor. 49 C.F.R. § 26.29(a).

Finally, for contracts with defined DBE contract goals, each FTA Recipient must include in each prime contract a provision stating that the contractor shall utilize the specific DBEs listed unless the contractor obtains the Agency's written consent; and that, unless the Agency's consent is provided, the contractor shall not be entitled to any payment for work or material unless it is performed or supplied by the listed DBE. 49 C.F.R. § 26.53(f) (1).

It is the policy of the Agency and the United States Department of Transportation ("DOT") that Disadvantaged Business Enterprises ("DBE's"), as defined herein and in the Federal regulations published at 49 C.F.R. part 26, shall have an equal opportunity to participate in DOT-assisted contracts.

ENERGY CONSERVATION

The contractor agrees to comply with mandatory standards and policies relating to energy efficiency, which are contained in the state energy conservation plan issued in compliance with the Energy Policy and Conservation Act.

EQUAL EMPLOYMENT OPPORTUNITY

During the performance of this contract, the contractor agrees as follows:

(1) The contractor will not discriminate against any employee or applicant for employment because of race, color, religion, sex, sexual orientation, gender identity, or national origin. The contractor will take affirmative action to ensure that applicants are employed, and that employees are treated during employment, without regard to their race, color, religion, sex, sexual orientation, gender identity, or national origin. Such action shall include, but not be limited to the following: Employment, upgrading, demotion, or transfer, recruitment or recruitment advertising; layoff or termination; rates of pay or other forms of compensation; and selection for training, including apprenticeship. The contractor agrees to post in conspicuous places, available to employees and applicants for employment, notices to be provided by the contracting officer setting forth the provisions of this nondiscrimination clause.

(2) The contractor will, in all solicitations or advertisements for employees placed by or on behalf of the contractor, state that all qualified applicants will receive consideration for employment without regard to race, color, religion, sex, sexual orientation, gender identity, or national origin.

(3) The contractor will not discharge or in any other manner discriminate against any employee or applicant for employment because such employee or applicant has inquired about, discussed, or disclosed the compensation of the employee or applicant or another employee or applicant. This provision shall not apply to instances in which an employee who has access to the compensation information of other employees or applicants as a part of such employee's essential job functions discloses the compensation of such other employees or applicants to individuals who do not otherwise have access to such information, unless such disclosure is in response to a formal complaint or charge, in furtherance of an investigation, proceeding, hearing, or action, including an investigation conducted by the employer, or is consistent with the contractor's legal duty to furnish information.

(4) The contractor will send to each labor union or representative of workers with which it has a collective bargaining agreement or other contract or understanding, a notice to be provided by the agency contracting officer, advising the labor union or workers' representative of the contractor's commitments under section 202 of Executive Order 11246 of September 24, 1965, and shall post copies of the notice in conspicuous places available to employees and applicants for employment.

(5) The contractor will comply with all provisions of Executive Order 11246 of September 24, 1965, and of the rules, regulations, and relevant orders of the Secretary of Labor.

(6) The contractor will furnish all information and reports required by Executive Order 11246 of September 24, 1965, and by the rules, regulations, and orders of the Secretary of Labor, or pursuant thereto, and will permit access to his books, records, and accounts by the contracting agency and the Secretary of Labor for purposes of investigation to ascertain compliance with such rules, regulations, and orders.

(7) In the event of the contractor's non-compliance with the nondiscrimination clauses of this contract or with any of such rules, regulations, or orders, this contract may be canceled, terminated or suspended in whole or in part and the contractor may be declared ineligible for further Government contracts in accordance with procedures authorized in Executive Order 11246 of September 24, 1965, and such other sanctions may be imposed and remedies invoked as provided in Executive Order 11246 of September 24, 1965, or by rule, regulation, or order of the Secretary of Labor, or as otherwise provided by law.

(8) The contractor will include the provisions of paragraphs (1) through (8) in every subcontract or purchase order unless exempted by rules, regulations, or orders of the Secretary of Labor issued pursuant to section 204 of Executive Order 11246 of September 24, 1965, so that such provisions will be binding upon each subcontractor or vendor. The contractor will take such action with respect to any subcontract or purchase order as may be directed by the Secretary of Labor as a means of enforcing such provisions including sanctions for noncompliance: Provided, however, that in the event the contractor becomes involved in, or is threatened with, litigation with a subcontractor or vendor as a result of such direction, the contractor may request the United States to enter into such litigation to protect the interests of the United States.

FEDERAL CHANGES

49 CFR Part 18 Federal Changes - Contractor shall at all times comply with all applicable FTA regulations, policies, procedures and directives, including without limitation those listed directly or by reference in the Master Agreement between Purchaser and FTA, as they may be amended or promulgated from time to time during the term of this contract. Contractor's failure to so comply shall constitute a material breach of this contract.

FLY AMERICA

a) Definitions. As used in this clause—
1) “International air transportation” means transportation by air between a place in the United States and a place outside the United States or between two places both of which are outside the United States. 2) “United States” means the 50 States, the District of Columbia, and outlying areas. 3) “U.S.-flag air carrier” means an air carrier holding a certificate under 49 U.S.C. Chapter 411.

b) When Federal funds are used to fund travel, Section 5 of the International Air Transportation Fair Competitive Practices Act of 1974 (49 U.S.C. 40118) (Fly America Act) requires contractors, Agencys, and others use U.S.-flag air carriers for U.S. Government-financed international air transportation of personnel (and their personal effects) or property, to the extent that service by those carriers is available. It requires the Comptroller General of the United States, in the absence of satisfactory proof of the necessity for foreign-flag air transportation, to disallow expenditures from funds, appropriated or otherwise established for the account of the United States, for international air transportation secured aboard a foreign-flag air carrier if a U.S.-flag air carrier is available to provide such services.

c) If available, the Contractor, in performing work under this contract, shall use U.S.-flag carriers for international air transportation of personnel (and their personal effects) or property.

d) In the event that the Contractor selects a carrier other than a U.S.-flag air carrier for international air transportation, the Contractor shall include a statement on vouchers involving such transportation essentially as follows:

Statement of Unavailability of U.S.-Flag Air Carriers
International air transportation of persons (and their personal effects) or property by U.S.-flag air carrier was not available or it was necessary to use foreign-flag air carrier service for the following reasons. See FAR § 47.403. [State reasons]:

e) Contractor shall include the substance of this clause, including this paragraph (e), in each subcontract or purchase under this contract that may involve international air transportation.

INCORPORATION OF FEDERAL TRANSIT ADMINISTRATION (FTA) TERMS

Incorporation of Federal Transit Administration (FTA) Terms - The provisions within include, in part, certain Standard Terms and Conditions required by DOT, whether or not expressly set forth in the preceding contract provisions. All contractual provisions required by DOT, as set forth in the current FTA Circular 4220 are hereby incorporated by reference. Anything to the contrary herein notwithstanding, all FTA mandated terms shall be deemed to control in the event of a conflict with other provisions contained in this Contract. The Contractor shall not perform any act, fail to perform any act, or refuse to comply with any request which would cause a violation of the FTA terms and conditions.

NO GOVERNMENT OBLIGATION TO THIRD PARTIES

The Agency and Contractor acknowledge and agree that, notwithstanding any concurrence by the Federal Government in or approval of the solicitation or award of the underlying Contract, absent the express written consent by the Federal Government, the Federal Government is not a party to this Contract and shall not be subject to any obligations or liabilities to the Agency, Contractor or any other party (whether or not a party to that contract) pertaining to any matter resulting from the underlying Contract. The Contractor agrees to include the above clause in each subcontract financed in whole or in part with Federal assistance provided by the FTA. It is further agreed that the clause shall not be modified, except to identify the subcontractor who will be subject to its provisions.

NOTIFICATION TO FTA

If a current or prospective legal matter that may affect the Federal Government emerges, the Recipient must promptly notify the FTA Chief Counsel and FTA Regional Counsel for the Region in which the Recipient is located. The Recipient must include a similar notification requirement in its Third Party Agreements and must require each Third Party Participant to include an equivalent provision in its sub agreements at every tier, for any agreement that is a "covered transaction" according to 2 C.F.R. §§ 180.220 and 1200.220.

(1) The types of legal matters that require notification include, but are not limited to, a major dispute, breach, default, litigation, or naming the Federal Government as a party to litigation or a legal disagreement in any forum for any reason.

(2) Matters that may affect the Federal Government include, but are not limited to, the Federal Government's interests in the Award, the accompanying Underlying Agreement, and any Amendments thereto, or the Federal Government's administration or enforcement of federal laws, regulations, and requirements.

(3) The Recipient must promptly notify the U.S. DOT Inspector General in addition to the FTA Chief Counsel or Regional Counsel for the Region in which the Recipient is located, if the Recipient has knowledge of potential fraud, waste, or abuse occurring on a Project receiving assistance from FTA. The notification provision applies if a person has or may have submitted a false claim under the False Claims Act, 31 U.S.C. § 3729 et seq., or has or may have committed a criminal or civil violation of law pertaining to such matters as fraud, conflict of interest, bribery, gratuity, or similar misconduct. This responsibility occurs whether the Project is subject to this Agreement or another agreement between the Recipient and FTA, or an agreement involving a principal, officer, employee, agent, or Third Party Participant of the Recipient. It also applies to subcontractors at any tier. Knowledge, as used in this paragraph, includes, but is not limited to, knowledge of a criminal or civil investigation by a Federal, state, or local law enforcement or other investigative agency, a criminal indictment or civil complaint, or probable cause that could support a criminal indictment, or any other credible information in the possession of the Recipient.

PROCUREMENT OF RECOVERED MATERIALS

(1) In the performance of this contract, the Contractor shall make maximum use of products containing recovered materials that are EPA- designated items unless the product cannot be acquired—
i. Competitively within a timeframe providing for compliance with the contract performance schedule;
ii. Meeting contract performance requirements; or
iii. At a reasonable price.

(2) Information about this requirement, along with the list of EPA-designate items, is available at EPA's Comprehensive Procurement Guidelines web site, https://www.epa.gov/smm/comprehensive-procurement-guideline-cpg-program."

PROGRAM FRAUD AND FALSE OR FRAUDULENT STATEMENTS AND RELATED ACTS

The contractor acknowledges that 31 U.S.C. Chap. 38 (Administrative Remedies for False Claims and Statements) applies to the contractor's actions pertaining to this contract."

PROHIBITION ON CERTAIN TELECOMMUNICATIONS AND VIDEO SURVEILLANCE SERVICES OR EQUIPMENT.

a. Recipients and subrecipients are prohibited from obligating or expending loan or grant funds to:

    1. Procure or obtain;

    2. Extend or renew a contract to procure or obtain;or

    3. Enter into a contract (or extend or renew a contract) to procure or obtain equipment, services, or systems that uses covered telecommunications equipment or services as a substantial or essential component of any system, or as critical technology as part of any system. As described in Public Law 115-232, section 889, covered telecommunications equipment is telecommunications equipment produced by Huawei Technologies Company or ZTE Corporation (or any subsidiary or affiliate of such entities).

        i. For the purpose of public saftey, security of government facilities, physical security surveillance of critical infrastructure, and other national security purposes, video surveillance and telecommunications equipment produced by Hytera Communications Corporation, Hangzhou Hikvision Digital Technology Company, or Dahua Technology Company(or any subsidiary or affiliate of such entities).

        ii. Telecommunications or video surveillance services provided by such entities or using such equipment.

        iii. Telecommunications or video surveillance equipment or services procuced or provided by an entity that the Secretary of Defense, in consultation with the Director of the National Intelligence or the Director of the Federal Bureau of Investigation, reasonably believes to be an entity owned or controlled by, or otherwise connected to, the government of a covered foreign country.

b. In implementing the prohibition under Public Law 115-232, section 889, subsection (f), paragraph (1), heads of executive agencies administering loan, grant, or subsidy programs shall prioritize available funding and technical support to assist affected businesses, institutions and organizations as is reasonably necessary for those affected entities to transition from covered communications equipment and services, to procure replacement equipment and services, and to ensure that communications service to users and customers is sustained.

c. See Public Law 115-232,section 889 for additional in formation.

d. See also § 200.471.

PROMPT PAYMENT

The contractor is required to pay its subcontractors performing work related to this contract for satisfactory performance of that work no later than 30 days after the contractor's receipt of payment for that work. In addition, the contractor is required to return any retainage payments to those subcontractors within 30 days after the subcontractor's work related to this contract is satisfactorily completed.

The contractor must promptly notify the Agency, whenever a DBE subcontractor performing work related to this contract is terminated or fails to complete its work and must make good faith efforts to engage another DBE subcontractor to perform at least the same amount of work. The contractor may not terminate any DBE subcontractor and perform that work through its own forces or those of an affiliate without prior written consent of the Agency.

SAFE OPERATION OF MOTOR VEHICLES

Seat Belt Use
The Contractor is encouraged to adopt and promote on-the-job seat belt use policies and programs for its employees and other personnel that operate company-owned vehicles, company rented vehicles, or personally operated vehicles. The terms "company-owned" and "company-leased" refer to vehicles owned or leased either by the Contractor or Agency.

Distracted Driving
The Contractor agrees to adopt and enforce workplace safety policies to decrease crashes caused by distracted drivers, including policies to ban text messaging while using an electronic device supplied by an employer, and driving a vehicle the driver owns or rents, a vehicle Contactor owns, leases, or rents, or a privately-owned vehicle when on official business in connection with the work performed under this Contract.

SEISMIC SAFETY

The contractor agrees that any new building or addition to an existing building will be designed and constructed in accordance with the standards for Seismic Safety required in Department of Transportation (DOT) Seismic Safety Regulations 49 C.F.R. part 41 and will certify to compliance to the extent required by the regulation. The contractor also agrees to ensure that all work performed under this contract, including work performed by a subcontractor, is in compliance with the standards required by the Seismic Safety regulations and the certification of compliance issued on the project.

SPECIAL DOL EEO CLAUSE

Applies to construction contracts > $10,000; This contractor and subcontractor shall abide by the requirements of 41 CFR 60-1.4(a), 60-300.5(a) and 60-741.5(a). These regulations prohibit discrimination against qualified individuals based on their status as protected veterans or individuals with disabilities and prohibit discrimination against all individuals based on their race, color, religion, sex, sexual orientation, gender identity or national origin. Moreover, these regulations require that covered prime contractors and subcontractors take affirmative action to employ and advance in employment individuals without regard to race, color, religion, sex, sexual orientation, gender identity, national origin, disability or veteran status.

SPECIAL NOTIFICATION REQUIREMENTS FOR STATES

Applies to States –

a. To the extent required under federal law, the State, as the Recipient, agrees to provide the following information about federal assistance awarded for its State Program, Project, or related activities:

(1) The Identification of FTA as the federal agency providing the federal assistance for a State Program or Project;
(2) The Catalog of Federal Domestic Assistance Number of the program from which the federal assistance for a State Program or Project is authorized; and
(3) The amount of federal assistance FTA has provided for a State Program or Project.

b. Documents - The State agrees to provide the information required under this provision in the following documents: (1) applications for federal assistance, (2) requests for proposals or solicitations, (3) forms, (4) notifications, (5) press releases, and (6) other publications.

SIMPLIFIED ACQUISITION THRESHOLD

Contracts for more than the simplified acquisition threshold, which is the inflation adjusted amount determined by the Civilian Agency Acquisition Council and the Defense Acquisition Regulations Council (Councils) as authorized by 41 U.S.C. § 1908, or otherwise set by law, must address administrative, contractual, or legal remedies in instances where contractors violate or breach contract terms, and provide for such sanctions and penalties as appropriate. (Note that the simplified acquisition threshold determines the procurement procedures that must be employed pursuant to 2 C.F.R. §§ 200.317–200.327. The simplified acquisition threshold does not exempt a procurement from other eligibility or processes requirements that may apply. For example, Buy America's eligibility and process requirements apply to any procurement in excess of $150,000. 49 U.S.C. § 5323(j)(13).

TERMINATION

Termination for Convenience (General Provision)
The Agency may terminate this contract, in whole or in part, at any time by written notice to the Contractor when it is in the Agency's best interest. The Contractor shall be paid its costs, including contract close-out costs, and profit on work performed up to the time of termination. The Contractor shall promptly submit its termination claim to Agency to be paid the Contractor. If the Contractor has any property in its possession belonging to Agency, the Contractor will account for the same, and dispose of it in the manner Agency directs.

Termination for Default [Breach or Cause] (General Provision)
If the Contractor does not deliver supplies in accordance with the contract delivery schedule, or if the contract is for services, the Contractor fails to perform in the manner called for in the contract, or if the Contractor fails to comply with any other provisions of the contract, the Agency may terminate this contract for default. Termination shall be effected by serving a Notice of Termination on the Contractor setting forth the manner in which the Contractor is in default. The Contractor will be paid only the contract price for supplies delivered and accepted, or services performed in accordance with the manner of performance set forth in the contract. If it is later determined by the Agency that the Contractor had an excusable reason for not performing, such as a strike, fire, or flood, events which are not the fault of or are beyond the control of the Contractor, the Agency, after setting up a new delivery of performance

schedule, may allow the Contractor to continue work, or treat the termination as a Termination for Convenience.

Opportunity to Cure (General Provision)
The Agency, in its sole discretion may, in the case of a termination for breach or default, allow the Contractor [an appropriately short period of time] in which to cure the defect. In such case, the Notice of Termination will state the time period in which cure is permitted and other appropriate conditions

If Contractor fails to remedy to Agency's satisfaction the breach or default of any of the terms, covenants, or conditions of this Contract within [10 days] after receipt by Contractor of written notice from Agency setting forth the nature of said breach or default, Agency shall have the right to terminate the contract without any further obligation to Contractor. Any such termination for default shall not in any way operate to preclude Agency from also pursuing all available remedies against Contractor and its sureties for said breach or default.

Waiver of Remedies for any Breach
In the event that Agency elects to waive its remedies for any breach by Contractor of any covenant, term or condition of this contract, such waiver by Agency shall not limit Agency's remedies for any succeeding breach of that or of any other covenant, term, or condition of this contract.

Termination for Convenience (Professional or Transit Service Contracts)
The Agency, by written notice, may terminate this contract, in whole or in part, when it is in the Agency's interest. If this contract is terminated, the Agency shall be liable only for payment under the payment provisions of this contract for services rendered before the effective date of termination.

Termination for Default (Supplies and Service)
If the Contractor fails to deliver supplies or to perform the services within the time specified in this contract or any extension, or if the Contractor fails to comply with any other provisions of this contract, the Agency may terminate this contract for default. The Agency shall terminate by delivering to the Contractor a Notice of Termination specifying the nature of the default. The Contractor will only be paid the contract price for supplies delivered and accepted, or services performed in accordance with the manner or performance set forth in this contract. If, after termination for failure to fulfill contract obligations, it is determined that the Contractor was not in default, the rights and obligations of the parties shall be the same as if the termination had been issued for the convenience of the Agency.

Termination for Default (Transportation Services)
If the Contractor fails to pick up the commodities or to perform the services, including delivery services, within the time specified in this contract or any extension, or if the Contractor fails to comply with any other provisions of this contract, the Agency may terminate this contract for default. The Agency shall terminate by delivering to the Contractor a Notice of Termination specifying the nature of default. The Contractor will only be paid the contract price for services performed in accordance with the manner of performance set forth in this contract.

If this contract is terminated while the Contractor has possession of Agency goods, the Contractor shall, upon direction of the Agency, protect and preserve the goods until surrendered to the Agency or its agent. The Contractor and Agency shall agree on payment for the preservation and protection of goods. Failure to agree on an amount will be resolved under the Dispute clause.

If, after termination for failure to fulfill contract obligations, it is determined that the Contractor was not in default, the rights and obligations of the parties shall be the same as if the termination had been issued for the convenience of the Agency.

Termination for Default (Construction)
If the Contractor refuses or fails to prosecute the work or any separable part, with the diligence that will ensure its completion within the time specified in this contract or any extension or fails to complete the work within this time, or if the Contractor fails to comply with any other provision of this contract, Agency may terminate this contract for default. The Agency shall terminate by delivering to the Contractor a Notice of Termination specifying the nature of the default. In this event, the Agency may take over the work and compete it by contract or otherwise, and may take possession of and use any materials, appliances, and plant on the work site necessary for completing the work. The Contractor and its sureties shall be liable for any damage to the Agency resulting from the Contractor's refusal or failure to complete the work within specified time, whether or not the Contractor's right to proceed with the work is terminated. This liability includes any increased costs incurred by the Agency in completing the work.

The Contractor's right to proceed shall not be terminated nor shall the Contractor be charged with damages under this clause if: 1. The delay in completing the work arises from unforeseeable causes beyond the control and without the fault or negligence of the Contractor. Examples of such causes include: acts of God, acts of Agency, acts of another contractor in the performance of a contract with Agency, epidemics, quarantine restrictions, strikes, freight embargoes; and 2. The Contractor, within [10] days from the beginning of any delay, notifies Agency in writing of the causes of delay. If, in the judgment of Agency, the delay is excusable, the time for completing the work shall be extended. The judgment of Agency shall be final and conclusive for the parties, but subject to appeal under the Disputes clause(s) of this contract. 3. If, after termination of the Contractor's right to proceed, it is determined that the Contractor was not in default, or that the delay was excusable, the rights and obligations of the parties will be the same as if the termination had been issued for the convenience of Agency.

Termination for Convenience or Default (Architect and Engineering)
The Agency may terminate this contract in whole or in part, for the Agency's convenience or because of the failure of the Contractor to fulfill the contract obligations. The Agency shall terminate by delivering to the Contractor a Notice of Termination specifying the nature, extent, and effective date of the termination. Upon receipt of the notice, the Contractor shall (1) immediately discontinue all services affected (unless the notice directs otherwise), and (2) deliver to the Agency 's Contracting Officer all data, drawings, specifications, reports, estimates, summaries, and other information and materials accumulated in performing this contract, whether completed or in process. Agency has a royalty-free, nonexclusive, and irrevocable license to reproduce, publish or otherwise use, all such data, drawings, specifications, reports, estimates, summaries, and other information and materials.

If the termination is for the convenience of the Agency, the Agency's Contracting Officer shall make an equitable adjustment in the contract price but shall allow no anticipated profit on unperformed services. If the termination is for failure of the Contractor to fulfill the contract obligations, the Agency may complete the work by contact or otherwise and the Contractor shall be liable for any additional cost incurred by the Agency. If, after termination for failure to fulfill contract obligations, it is determined that the Contractor was not in default, the rights and obligations of the parties shall be the same as if the termination had been issued for the convenience of Agency

Termination for Convenience or Default (Cost-Type Contracts)
The Agency may terminate this contract, or any portion of it, by serving a Notice of Termination on the Contractor. The notice shall state whether the termination is for convenience of Agency or for the default of the Contractor. If the termination is for default, the notice shall state the manner in which the Contractor has failed to perform the requirements of the contract. The Contractor shall account for any property in its possession paid for from funds received from the Agency, or property supplied to the Contractor by the Agency. If the termination is for default, the Agency may fix the fee, if the contract provides for a fee, to be paid the Contractor in proportion to the value, if any, of work performed up to the time of termination. The Contractor shall promptly submit its termination claim to the Agency and the parties shall negotiate the termination settlement to be paid the Contractor.

If the termination is for the convenience of Agency, the Contractor shall be paid its contract close-out costs, and a fee, if the contract provided for payment of

a fee, in proportion to the work performed up to the time of termination.

If, after serving a Notice of Termination for Default, the Agency determines that the Contractor has an excusable reason for not performing, the Agency, after setting up a new work schedule, may allow the Contractor to continue work, or treat the termination as a Termination for Convenience.

VETERANS HIRING PREFERENCE

Veterans Employment - Recipients of Federal financial assistance shall ensure that contractors working on a capital project funded using such assistance give a hiring preference, to the extent practicable, to veterans (as defined in section 2108 of title 5) who have the requisite skills and abilities to perform the construction work required under the contract. This subsection shall not be understood, construed or enforced in any manner that would require an employer to give a preference to any veteran over any equally qualified applicant who is a member of any racial or ethnic minority, female, an individual with a disability, or a former employee.

VIOLATION AND BREACH OF CONTRACT

Disputes:
Disputes arising in the performance of this Contract that are not resolved by agreement of the parties shall be decided in writing by the authorized representative of the agency. This decision shall be final and conclusive unless within [10] days from the date of receipt of its copy, the Contractor mails or otherwise furnishes a written appeal to the agencies authorized representative. In connection with any such appeal, the Contractor shall be afforded an opportunity to be heard and to offer evidence in support of its position. The decision of the agencies authorized representative shall be binding upon the Contractor and the Contractor shall abide be the decision.

Performance during Dispute:
Unless otherwise directed by the agencies authorized representative, contractor shall continue performance under this contract while matters in dispute are being resolved.

Claims for Damages:
Should either party to the contract suffer injury or damage to person or property because of any act or omission of the party or of any of his employees, agents or others for whose acts he is legally liable, a claim for damages therefore shall be made in writing to such other party within a reasonable time after the first observance of such injury or damage.

Remedies:
Unless this contract provides otherwise, all claims, counterclaims, disputes and other matters in question between the agencies authorized representative and contractor arising out of or relating to this agreement or its breach will be decided by arbitration if the parties mutually agree, or in a court of competent jurisdiction within the State in which the Agency is located.

Rights and Remedies:
Duties and obligations imposed by the contract documents and the rights and remedies available thereunder shall be in addition to and not a limitation of any duties, obligations, rights and remedies otherwise imposed or available by law. No action or failure to act by the Agency or contractor shall constitute a waiver of any right or duty afforded any of them under the contract, nor shall any such action or failure to act constitute an approval of or acquiescence in any breach thereunder, except as may be specifically agreed in writing.

Federal Certifications

CERTIFICATION AND RESTRICTIONS ON LOBBYING

I,_____hereby certify
(Name and title of official)

On behalf of _____that:
(Name of Bidder/Company Name)

- No federal appropriated funds have been paid or will be paid, by or on behalf of the undersigned, to any person for influencing or attempting to influence an officer or employee of any agency, a Member of Congress, and officer or employee of Congress, or an employee of a Member of Congress in connection with the awarding of any federal contract, the making of any federal grant, the making of any federal loan, the entering into of any cooperative agreement, and the extension, continuation, renewal, amendment, or modification of any federal contract, grant, loan, or cooperative agreement.
- If any funds other than federal appropriated funds have been paid or will be paid to any person influencing or attempting to influence an officer or employee of any agency, a Member of Congress, and officer or employee of Congress, or an employee of a Member of Congress in connection with the federal contract, grant, loan, or cooperative agreement, the undersigned shall complete and submit Standard Form – LLL, “Disclosure Form to Report Lobbying,” in accordance with its instructions.
- The undersigned shall require that the language of this certification be included in the award documents for all sub-awards at all tiers (including sub-contracts, sub-grants and contracts under grants, loans, and cooperative agreements) and that all sub-recipients shall certify and disclose accordingly.

This certification is a material representation of fact upon which reliance was placed when this transaction was made or entered into. Submission of this certification is a prerequisite for making or entering into this transaction imposed by 31 U.S.C. § 1352 (as amended by the Lobbying Disclosure Act of 1995). Any person who fails to file the required certification shall be subject to a civil penalty of not less than $10,000 and not more than $100,000 for each such failure.

The undersigned certifies or affirms the truthfulness and accuracy of the contents of the statements submitted on or with this certification and understands that the provisions of 31 U.S.C. Section 3801, et seq., are applicable thereto.

Name of Bidder/Company Name:_____

Type or print name:_____

Signature of authorized representative:_____ Date_____/_____/_____

GOVERNMENT-WIDE DEBARMENT AND SUSPENSION (NONPROCUREMENT)

Instructions for Certification: By signing and submitting this bid or proposal, the prospective lower tier participant is providing the signed certification set out below.

(1) It will comply and facilitate compliance with U.S. DOT regulations, "Nonprocurement Suspension and Debarment," 2 CFR part 1200, which adopts and supplements the U.S. Office of Management and Budget (U.S. OMB) "Guidelines to Agencies on Governmentwide Debarment and Suspension (Nonprocurement)," 2 CFR part 180,

(2) To the best of its knowledge and belief, that its Principals and Subrecipients at the first tier:

a. Are eligible to participate in covered transactions of any Federal department or agency and are not presently:

   1. Debarred,
   2. Suspended,
   3. Proposed for debarment,
   4. Declared ineligible,
   5. Voluntarily excluded, or
   6. Disqualified,

b. Its management has not within a three-year period preceding its latest application or proposal been convicted of or had a civil judgment rendered against any of them for:

   1. Commission of fraud or a criminal offense in connection with obtaining, attempting to obtain, or performing a public (Federal, State, or local) transaction, or contract under a public transaction,
   2. Violation of any Federal or State antitrust statute, or,
   3. Commission of embezzlement, theft, forgery, bribery, falsification or destruction of records, making any false statement, or receiving stolen property,

c. It is not presently indicted for, or otherwise criminally or civilly charged by a governmental entity (Federal, State, or local) with commission of any of the offenses listed in the preceding subsection 2.b of this Certification,

d. It has not had one or more public transactions (Federal, State, or local) terminated for cause or default within a three-year period preceding this Certification,

e. If, at a later time, it receives any information that contradicts the statements of subsections 2.a – 2.d above, it will promptly provide that information to FTA,

f. It will treat each lower tier contract or lower tier subcontract under its Project as a covered lower tier contract for purposes of 2 CFR part 1200 and 2 CFR part 180 if it:

   1. Equals or exceeds $25,000,,
   2. Is for audit services, or,
   3. Requires the consent of a Federal official, and

g. It will require that each covered lower tier contractor and subcontractor:

   1. Comply and facilitate compliance with the Federal requirements of 2 CFR parts 180 and 1200, and
   2. Assure that each lower tier participant in its Project is not presently declared by any Federal department or agency to be:

      a. Debarred from participation in its federally funded Project,
      b. Suspended from participation in its federally funded Project,
      c. Proposed for debarment from participation in its federally funded Project,
      d. Declared ineligible to participate in its federally funded Project,
      e. Voluntarily excluded from participation in its federally funded Project, or
      f. Disqualified from participation in its federally funded Project, and

   3. It will provide a written explanation as indicated on a page attached in FTA's TrAMS platform or the Signature Page if it or any of its principals, including any of its first tier Subrecipients or its Third-Party Participants at a lower tier, is unable to certify compliance with the preceding statements in this Certification Group.

(3) It will provide a written explanation as indicated on a page attached in FTA's TrAMS platform or the Signature Page if it or any of its principals, including any of its first tier Subrecipients or its Third-Party Participants at a lower tier, is unable to certify compliance with the preceding statements in this Certification Group.

Certification

Contractor:_____

Signature of Authorized Official:_____Date_____/_____/_____

Name and Title of Contractor's Authorized Official:_____

BUY AMERICA CERTIFICATION
STEEL OR MANUFACTURED PRODUCTS

If steel, iron, or manufactured products (as defined in 49 CFR 661.3 and 661.5) are being procured, the appropriate certificate as set forth below shall be completed and submitted by each bidder or offeror in accordance with the requirement contained in 49 CFR 661.13(b).

Certificate of Compliance with Buy America Requirements

The bidder or offeror hereby certifies that it will comply with the requirements of 49 U.S.C. 5323(j)(1), and the applicable regulations in 49 CFR part 661.

Company _____

Name _____ Title _____

Signature _____ Date _____

Certificate of Non-Compliance with Buy America Steel or Manufactured Products Requirements

The bidder or offeror hereby certifies that it cannot comply with the requirements of 49 U.S.C. 5323(j), but it may qualify for an exception to the requirement pursuant to 49 U.S.C. 5323(j)(2), as amended, and the applicable regulations in 49 C.F.R. 661.7.

Company _____

Name _____ Title _____

Signature _____ Date _____

ST: EXC-01
1/23

ALABAMA DEPARTMENT OF REVENUE
SALES AND USE TAX DIVISION
P.O. Box 327710 • Montgomery, AL 36132-7710

Reset

Application For
Sales and Use Tax Certificate of Exemption

FOR GOVERNMENT ENTITY PROJECT

This Certificate of Exemption will be limited to purchases which qualify for an exemption of sales and use taxes pursuant to Rule No. 810-6-3-.77

PROJECT INFORMATION:

PROJECT NAME				PROJECT OWNER'S FEIN (EXEMPT ENTITY)
STREET ADDRESS OF PROJECT (CITY AND COUNTY INCLUDED)	CITY	ZIP	COUNTY	

APPLICANT'S INFORMATION:

RELATION: *(CHOOSE ONE)*

☐ Government Entity ☐ General Contractor ☐ Subcontractor

APPLICANT'S LEGAL NAME	FEIN
DBA	CONSUMER'S USE TAX ACCOUNT NUMBER

MAILING ADDRESS: STREET	CITY	STATE	ZIP	COUNTY

CONTACT PERSON	BUSINESS TELEPHONE NUMBER
	( )

EMAIL ADDRESS

PROJECT START DATE	PROJECT END DATE

WILL THE APPLICANT HAVE ANY SUBCONTRACTORS ON THIS JOB?	NAME OF PARTY TO THE CONTRACT
☐ Yes ☐ No If yes, please attach list.	

JOB DESCRIPTION

WILL ANY POLLUTION CONTROL EXEMPTION BE APPLICABLE?	ESTIMATED POLLUTION CONTROL COST
☐ Yes ☐ No	$

TOTAL PROJECT BID AMOUNT (APPLICANT'S PORTION OF PROJECT)	LABOR COST (APPLICANT'S PORTION OF PROJECT)	MATERIAL COST (APPLICANT'S PORTION OF PROJECT)
$	$	$

REVENUE DEPARTMENT USE ONLY

PENDING DOCUMENTATION / INFORMATION:

☐ GCL ☐ SBL ☐ Contract / NTP / LOI ☐ LOS ☐ Project Dates / Breakdown of Costs

Contact Dates: _____ Received Date: _____

_____ Forwarded for Denial: _____

PROJECT NAME	PROJECT OWNER'S FEIN (EXEMPT ENTITY)

FORM OF OWNERSHIP:

☐ Individual ☐ Partnership ☐ Corporation ☐ Multi member LLC ☐ Single member LLC ☐ Government Entity

If applicant is a corporation, a copy of the certified certificate of incorporation, amended certificate of incorporation, certificate of authority, or articles of incorporation should be attached. If the applicant is a limited liability company or a limited liability partnership, a copy of the certified articles of organization should be attached.

OWNERSHIP INFORMATION:

Corporations – give name, title, home address, and Social Security Number of each officer.

Partnerships – give name, home address, Social Security Number or FEIN of each partner.

Sole Proprietorships – give name, home address, Social Security Number of owner.

LLC – give name, home address, and Social Security Number or FEIN of each member.

LLP – give name, home address, and Social Security Number or FEIN of each partner.

NAME *(PLEASE PRINT)* _____ SIGNATURE _____

TITLE _____ DATE _____

REVENUE DEPARTMENT USE ONLY

PENDING OTHER:

☐ Government Entity ☐ General Contractor ☐ Not on LOS

Contact Dates: _____ Received Date: _____

_____ Forwarded for Denial: _____

Examiner's Remarks _____

Examiner _____ Date _____

Instructions For Preparation of Form ST: EXC-01
Sales and Use Tax Certificate of Exemption for Government Entity Project

NOTE: Exemption Certificates will be issued as of the project start date or the received date of the application. If, upon receipt of the application, the project has already commenced, the certificate will be issued as of the received date of the application. Any purchases made prior to the issuance of a certificate will not be exempt.

In order to expedite the processing of your application, please include the following documentation when submitting your application:

Exempt Entity:
1. Signed Application
2. Copy of Executed/Signed Contract, Letter of Intent, Notice of Award, and/or Notice to Proceed

General Contractor:
1. Signed Application
2. Copy of Executed/Signed Contract, Letter of Intent, Notice of Award, and/or Notice to Proceed
3. List of Subcontractors
4. Alabama Board of General Contractor's License
5. State/County Business License (usually obtained through county probate office)

Subcontractor:
1. Signed Application
2. Alabama Board of General Contractor's License
3. State/County Business License (usually obtained through county probate office)
4. List of Subcontractors (if any)

General contractors and subcontractors:
- Any additions and/or deletions to the list of subcontractors working on a project must be submitted to the Department within 30 days of occurrence.
- If an extension is needed for a project, please contact the Department of Revenue at the address, number, or email listed below. Extension requests should be submitted no more than 30 days after expiration date.
- Subcontractors Project Start Date should be the date they will begin working on the project and ordering materials

THERE IS A FILING REQUIREMENT IF YOUR APPLICATION IS APPROVED. The return will be filed through the Consumer's Use Tax account. Please see the following page for detailed instructions and general information regarding the reporting requirements.

The application and required documentation may be mailed, faxed, or emailed to the following:

Fax: (334) 353-7867

Email: STContractorsExempt@revenue.alabama.gov

Mailing Address: ATTN: Contractor's Exemption
Alabama Department of Revenue
Sales & Use Tax Division
Room 4303
PO Box 327710
Montgomery, AL 36132-7710

General Information and Instructions Regarding the Reporting Requirements for Contractors Awarded an Exemption Certificate

A contractor's exemption certificate for a Government Entity project is needed in order to purchase materials tax exempt for the qualified project. Once the exemption certificate has been applied for and awarded, there is a monthly filing requirement to report the purchases that have been made for each exempt project. The Consumer's Use (CNU) tax account is used to report the tax-exempt purchases made with each certificate for each exempt project for each month.

The consumer's use tax return must be filed for each of the months covered by the exemption certificate. (For example, if the certificate's effective date is June 29, 2014 and the expected completion date is October 1, 2014, a consumer's use tax return must be filed for each of the following months: June, July, August, September, and October.) A return MUST be filed each month to report the monthly purchases. Therefore, all active exemption certificates must be included on the monthly report even if the monthly purchases for a specific project was $0.

If a CNU tax account is not already open under the taxpayer/business name, one will automatically be assigned at the time the exemption certificate is generated. Electronic filing is required through the Department's online filing system, My Alabama Taxes (MAT). A letter containing the online filing information will be mailed to the address on file within a few days after the new CNU tax account has been assigned. This letter will contain all the information needed to create your online filing account in MAT. For questions relating to setting up the account on www.myalabamataxes.alabama.gov, please contact Business Registration at 334-242-1584 or the Sales Tax Division at 1-866-576-6531.

Once the MAT account is set up, please log in and file the monthly CNU tax return. There is a table located at the bottom left hand corner labeled "Contractor's Exemption for Government Construction Projects." All three fields in the table are required to be completed: exemption number, project number, and total amount of purchases for that specific project for the month.

***Please do not use lines 1 through 9 of the return for reporting exempt project information. Leave these lines blank unless taxable purchases were made outside of the state of Alabama that need to be reported and tax remitted. (Lines 1 through 9 do not have anything to do with the exemption reporting requirements).

When the certificate expires (upon the project's completion) and the CNU tax account is no longer needed, please contact the Business Registration Unit at 334-242-1584 and close the CNU tax account. Please be advised that if there are multiple government entity projects open, the consumer's use tax account should remain open until the last project completion date. For example, if Project EXC00ABCD ends in June of 2014 but Project EXC00EFGH ends January of 2015, the CNU tax account must remain open until the end of January 2015. A return for Project EXC00EFGH must be filed all the way through January 2015.

If the applicant already has a CNU tax account and it is currently set up online, please use this account to report exempt project purchases through www.myalabamataxes.alabama.gov using the instructions provided above. The return may then be filed as usual.

***All Consumer's Use Tax returns are due on the 20th of the month following the month in which purchases were made (i.e., the return for the month of June is due July 20th, etc. There are 20 days to file the return before it is deemed late.)

***Any penalty waiver requests may be directed to the Sales and Use Tax Division at 1-866-576-6531. Only one waiver per 18 month period is allowed.

ATTACHMENT "A"

Instructions to Proposers

DISADVANTAGED BUSINESS ENTERPRISE (DBE) PARTICIPATION

The requirements of 49 CFR, Part 26, apply to this contract. In connection with the performance of this Contract, the successful bidder agrees to cooperate with the Town of Loxley, AL in meeting its commitments and goals to ensure that Disadvantaged Business Enterprises (DBEs), as defined in Title 49 CFR, Part 26, have an equal opportunity to receive and participate in this DOT/FTA-assisted project.

To be recognized as a DBE, a firm must become certified through the Alabama United Certification Program (AL UCP). Requirements, certification guidelines and applications are available at https://cpmsapps2.dot.state.al.us/alucp

Requirements and goals for Disadvantaged Business Enterprise participation in this Project are as follows:

A minimum of three point five eight percent (3.58%) of the total contract price, as awarded, shall be established as a goal to be made available to certified DBEs.

Prior to Contract award, the apparent successful bidder shall submit a written acknowledgement of the above goal and shall include names of DBE subcontractors, addresses of contact persons, a description of work to be performed, dollar values of each proposed DBE subcontract and proof of the subcontractors eligibility as a DBE. This information shall be submitted on Attachment "C" - DBE Letter of Intent and Attachment "D" - DBE Affidavit that are furnished with this solicitation.

If the goals are not met, the bidder must demonstrate that sufficient good faith efforts were made to meet the DBE contract goals and shall document the steps that were taken to obtain DBE participation (see Attachment "E" - DBE Unavailable Certification.) Failure to provide required documentation of good faith efforts may be reason for disqualification of the Bid/Proposal.

Specific Contractual Terms and Conditions

DBE PAYMENT AND REPORTING REQUIREMENTS

1) Contractor Reporting Requirements

The prime contractor understands that expenditures made to DBEs will be recognized and measured as required by Title 49 CFR, §26.55.

The prime contractor agrees to make available to the City of Loxley, AL (Owner) and/or the Baldwin County Commission, upon request, a copy of all DBE subcontracts. The subcontractor shall ensure that all subcontracts or agreements with DBEs to supply labor or materials require that the subcontract and all lower tier subcontracts be performed in accordance with the provisions of Title 49 CFR, §26.53.

The City of Loxley, AL (Owner) will require prime contractors to maintain records and documents of payments to DBEs for three (3) years following the performance of the contract. These records shall be made available for inspection upon request by any authorized representative of the City of Loxley, AL (Owner) and/or the Baldwin County Commission or the DOT. This reporting requirement also extends to any certified DBE subcontractor.

The City of Loxley, AL (Owner) and/or the Baldwin County Commission shall also be permitted to perform interim audits of contract payments to DBEs. Said audits will consist of reviewing payments to DBE subcontractors to ensure that the actual amount paid to DBE subcontractors equals or exceeds the dollar amounts stated in the schedule of DBE participation.

2) Good Faith Efforts

The following is a list of types of actions which will be considered as part of the bidder's good faith efforts to obtain DBE participation. It is not a mandatory checklist, nor is it intended to be exclusive or exhaustive. Other factors or types of efforts may be relevant in appropriate cases.

- Soliciting through all reasonable and available means the interest of all certified DBE's who have the capability to perform work under the contract. This shall include attendance at pre-bid meetings, advertising and /or written notices. The bidder shall allow sufficient time to allow the DBEs to respond to the solicitation.
- Selecting portions of the work to be performed by DBEs in order to increase the likelihood that the DBE goals will be achieved.
- Providing interested DBEs with adequate information about the plans, specifications, and requirements of the contract in a timely manner to assist them in responding to a solicitation.
- Negotiating in good faith with interested DBEs. It will be the responsibility of the bidder to make a portion of the work available to DBE subcontractors and suppliers and to select those portions of the work or materials consistent with the available DBE's. Evidence of negotiations shall include the names, addresses, and telephone numbers of DBE's that were considered and a description of the information provided regarding the plans and specifications for the work selected for

subcontractors, and evidence as to why additional agreements could not be reached for DBE's to perform the work.

- Not rejecting DBEs as being unqualified without sound reasons based on a thorough investigation of their capabilities.
- Efforts to assist interested DBEs in obtaining bonding, lines of credit, or insurance as required.
- Efforts to assist interested DBEs in obtaining necessary equipment, supplies, materials, or related assistance or services.
- Use of services of available minority/women community organizations; minority/women contractors' groups; local, state, and federal minority/women business assistance offices; and other organizations that aid in the recruitment and placement of DBEs.

3) Legal and Contract Remedies

The prime contractor understands that the City of Loxley, AL (Owner) will bring to the attention of the Department of Transportation any false, fraudulent, or dishonest conduct in connection with the program, so that DOT can take the steps (e.g. referral to the Department of Justice for criminal prosecution, referral to the DOT inspector General, action under suspension and debarment of Program Fraud or Civil Penalties rules) provided in Title 49 CFR, §26.109. The prime contractor understands that the City of Loxley, AL (Owner) will consider similar action under their own legal authorities, including responsibility determinations in future contracts.

4) Required Federal Clauses

The prime contractor shall ensure that the following clauses are placed in every solicitation, contract and subcontract associated with this DOT-assisted project:

a. This Contract is subject to the requirements of Title 49, Code of Federal Regulations, Part 26, Participation by Disadvantaged Business Enterprises in U. S. Department of Transportation Financial Assistance Program. The national goal for participation of Disadvantaged Business Enterprises (DBE) is 10%.

b. The Contractor, sub-recipient or subcontractor shall not discriminate on the basis of race, color, national origin, or sex in the performance of this Contract. The Contractor shall carry out applicable requirements of Title 49 CFR, Part 26, in the award and administration of this DOT-assisted Contract. Failure by the Contractor to carry out these requirements is a material breach of this Contract, which may result in the termination of this Contract or such other remedy as th City of Loxley, AL (Owner) deems appropriate, which may include, but is not limited to:

   1. Withholding monthly progress payments
   2. Assessing sanctions
   3. Liquidated damages; and/or disqualifying the contractor from future bidding as non-responsible

c. Bidders/offerors are required to document sufficient DBE participation (see Attachment "C" - DBE Letter of Intent and Attachment "D" - DBE Affidavit) to meet these goals or, alternatively, document adequate good faith efforts to do so, as provided for in

Title 49 CFR, §26.53. Award of this Contract is conditioned on submission of the following:

1. The names and addresses of DBE firms that will participate in this Contract
2. A description of the work each DBE will perform
3. The dollar amount of the participation of each DBE firm
4. Written documentation of the bidder/offeror's commitment to use a DBE subcontractor whose participation will assist in meeting the contract goal
5. Written confirmation from the participating DBE as provided in the prime contractor's commitment
6. If the contract goal is not met, evidence of good faith efforts to do so (see Attachment "E" - DBE Unavailable Certification)

The successful bidder/offeror will be required to report its DBE participation obtained through race-neutral means throughout the period of performance.

5) The prime contractor agrees to pay each subcontractor under this prime contract for satisfactory performance of its contract no later than 30 days from the receipt of each payment the prime contractor receives from the City of Loxley, AL (Owner) The prime contractor agrees further to return retainage payments to each subcontractor within 30 days after subcontractor's work is satisfactorily completed. Any delay or postponement of payment from the above referenced time frame may occur only for good cause following written approval of the City of Loxley, AL (Owner) This clause applies to both DBE and non-DBE subcontractors (see Attachment "F" - Prompt Payment Affidavit.)

6) The prime contractor agrees not to terminate for convenience a DBE subcontractor, and then perform the work of the terminated subcontract with its own forces or those of an affiliate, without prior written consent from the City of Loxley, AL (Owner) The prime contractor must promptly notify the City of Loxley, AL (Owner) whenever a DBE subcontract related to this contract is terminated or the subcontractor fails to complete its work. Should such a situation arise, the prime contractor agrees to make good faith efforts to find another DBE subcontractor to substitute for the original DBE. These good faith efforts shall be directed at finding another DBE to perform at least the same amount of work under the contract as the DBE that was terminated.

ATTACHMENT "C" **– DBE Letter of Intent**

This form is to be completed by the Prime Contractor and each DBE Subcontractor

To: _____

(Name of Proposer)

The undersigned intends to perform work in connection with the above project as a DBE (circle one):

Individual _____ Corporation_____Partnership _____ Joint Venture _____

The Disadvantaged Business Enterprise status of the undersigned is confirmed:

1. On the AL UCP list of Disadvantaged Business Enterprises dated_____; and
2. On the attached Disadvantaged Business Enterprise Affidavit.

The undersigned is prepared to perform the following work in connection with the above project (Specify in detail particular work items or parts thereof to be performed):

_____

_____

The DBE contractor will perform this work at the following price: _____

The following commencement date has been projected for such work, and the undersigned is projecting completion of such work as follows:

Items	**Projected Commencement Date**	**Projected Completion Date**
_____	_____	_____
_____	_____	_____

The above work will not be sublet to a non-Disadvantaged Business Enterprise at any tier. The undersigned will enter into a formal agreement for the above work with prime contractor, conditioned upon the prime contractor's execution of a contract with the City of Loxley, AL.

Name of Disadvantaged Business Enterprise: _____

Address of Disadvantaged Business Enterprise: _____

By: _____

Title: _____

Date: _____

ATTACHMENT "D"**– DBE Affidavit**

This form is to be completed by each DBE Subcontractor

State of_____ Date: _____

County: _____

The undersigned, being duly sworn, deposes and says that he/she is the (sole owner, partner, president, treasurer, or other duly authorized official of a corporation) of

_____

(Name of Official)

_____

(Name of DBE)

and certifies that since the date of its certification through the AL UCP, the certification has not been revoked nor has it expired nor has there been any change in the minority status of

_____

(Name of DBE)

_____

(Signature and Title of Person Making Affidavit)

Sworn to before me this_____day_____, 20_____

_____

(Notary Public)

NOTE: The proposer must attach the DBE's most recent certification letter or document to this affidavit.

ATTACHMENT "E"**– DBE Unavailable Certification**

This form is to be completed by the Prime Contractor to document good faith efforts to solicit DBE participation

I,_____, the _____
(Name) (Title)

of_____certify that on _____
(Proposer/Prime Contractor) (Date)

I contacted the following Disadvantaged Business Enterprise to obtain a proposal to perform the following work item(s):

DBE Organization	**Work Items Sought**	**Form of Proposal Sought (e.g., materials, materials & labor, labor only, etc.)**
_____	_____	_____
_____	_____	_____
_____	_____	_____
_____	_____	_____
_____	_____	_____
_____	_____	_____
_____	_____	_____
_____	_____	_____

To the best of my knowledge and belief, said Disadvantaged Business Enterprises were unavailable for work on this project, unable to prepare a proposal, or were not selected for the work sought for the following reason(s):

_____

_____

_____

_____

_____

_____

Signature:_____ Date: _____

ATTACHMENT "F" **– Prompt Payment Affidavit**

Either section (A) or (B) of this form is to be completed by the Prime Contractor

(A) The undersigned affirms, to the best of his/her knowledge and belief, that:

(1) The undersigned understands and agrees that the Contractor is required to pay all Subcontractors for all work that any Subcontractor has satisfactorily completed no later than thirty (30) days after the Contractor has received payment from the City of Loxley, AL (Owner) for that work.

(2) The undersigned understands and agrees that the Contractor is required to pay retainage amounts, if any, to a Subcontractor no later than thirty (30) days after the City of Loxley, AL (Owner) has released retainage to the Contractor for that portion of the work.

(3) The undersigned understands and agrees that any delay in or postponement of payment to any Subcontractor by the Contractor requires the Contractor to demonstrate good cause and to receive prior written approval by the City of Loxley, AL (Owner).

(4) The undersigned understands and agrees that the City of Loxley, AL (Owner) will not pay the Contractor for Services performed or Deliverables submitted unless and until the Contractor certifies that the Subcontractors have been promptly paid for the work or services they have performed under all previous payment requests, as evidenced by the filing with the Town of Loxley (Owner) the Contractor's sworn statement that the Contractor has complied with the prompt payment requirements.

The undersigned solemnly declares and affirms under penalty of perjury that the above and foregoing are true and correct, and that he/she is authorized on behalf of the Contractor to sign this affidavit.

Signature	Company Name
Official's Name and Title	Date

(B) The undersigned solemnly declares and affirms under penalty of perjury that no Subcontractors will be used in the performance of the work or services

and, as such, the statutory prompt payment requirements are inapplicable. The undersigned further declares that he/she is authorized on behalf of the Contractor to sign this affidavit.

Signature	Company Name
Official's Name and Title	Date

DIVISION 1

GENERAL REQUIREMENTS

SECTION 01100

SUMMARY

PART 1 GENERAL

1.1 SUMMARY

A. Section Includes:
1. Contract description.
2. Work by Owner or other Work at the Site.
3. Owner-furnished products.
4. Contractor's use of Site.
5. Work sequence.
6. Owner occupancy.
7. Permits.
8. Specification conventions.

1.2 CONTRACT DESCRIPTION

A. Work of the Project includes the **LOXLEY SECTION 5307 TRANSIT HUB**.

B. Perform Work under stipulated sum Contract with Owner according to Conditions of Contract.

1.3 WORK BY OWNER OR OTHERS

A. Coordinate Work with utilities of Owner and public or private agencies.

B. Items noted NIC (Not in Contract), furnishings and equipment, will be furnished and installed by Owner.

1.4 OWNER-FURNISHED PRODUCTS

A. Owner's Responsibilities:
1. Arrange for and deliver Owner-reviewed Shop Drawings, Product Data, and Samples to Contractor.
2. Arrange and pay for delivery to Site.
3. Upon delivery, inspect products jointly with Contractor.
4. Submit claims for transportation damage and replace damaged, defective, or deficient items.
5. Arrange for manufacturers' warranties, inspections, and service.

B. Contractor's Responsibilities:
1. Review Owner-reviewed Shop Drawings, Product Data, and Samples.
2. Receive and unload products at Site; inspect for completeness or damage jointly with Owner.
3. Handle, store, install, and finish products.
4. Repair or replace items damaged after receipt.

C. Items furnished by Owner for installation by Contractor:
   1. See Equipment Plans for items furnished by Owner and installed by Contractor.

1.5 WORK SEQUENCE

A. Construct Work in accordance with the Phasing Plans, if any.

1.6 OWNER OCCUPANCY

A. Owner will not occupy the building before the entire project is substantially complete.

1.7 PERMITS

A. Furnish all necessary permits for construction of Work.

1.8 SPECIFICATION CONVENTIONS

A. These Specifications are written in imperative mood and streamlined form. This imperative language is directed to Contractor unless specifically noted otherwise. The words "shall be" are included by inference where a colon (:) is used within sentences or phrases.

PART 2 PRODUCTS - Not Used

PART 3 EXECUTION - Not Used

END OF SECTION

SECTION 01200

PRICE AND PAYMENT PROCEDURES

PART 1 GENERAL

1.1 SECTION INCLUDES

A. Schedule of values.

B. Applications for payment.

C. Change procedures.

D. Defect assessment.

E. Cash allowances

F. Alternates

1.2 SCHEDULE OF VALUES

A. Submit printed schedule on AIA Form G703 - Continuation Sheet.

B. Submit Schedule of Values in duplicate within 20 days after date of Owner-Contractor Agreement.

C. Format: Utilize Table of Contents of this Project Manual. Identify each line item with number and title of major specification Section. Identify site mobilization, bonds and insurance.

D. Include in each line item, amount of Allowances specified in this section. For unit cost Allowances, identify quantities taken from Contract Documents multiplied by unit cost to achieve total for each item.

E. Include within each line item, direct proportional amount of Contractor's overhead and profit.

F. Revise schedule to list approved Change Orders, with each Application For Payment.

1.3 APPLICATIONS FOR PAYMENT

A. Submit three copies of each application on AIA Form G702 - Application and Certificate for Payment and AIA G703 - Continuation Sheet for G702.

B. Content and Format: Utilize Schedule of Values for listing items in Application for Payment.

C. Submit updated construction schedule with each Application for Payment.

D. Payment Period: Thirty (30) days.

E. Submit with transmittal letter as specified for Submittals in Section 01330.

F. Substantiating Data: When Architect requires substantiating information, submit data justifying dollar amounts in question. Include the following with Application for Payment:
   1. Current construction photographs.
   2. Partial release of liens from major subcontractors and vendors (when required by Owner).

1.4 CHANGE PROCEDURES

A. Submittals: Submit name of individual authorized to receive change documents, and be responsible for informing others in Contractor's employ or Subcontractors of changes to the Work.

B. The Architect will advise of minor changes in the Work not involving adjustment to Contract Sum/Price or Contract Time by issuing supplemental instructions on AIA Form G710.

C. The Architect may issue a Change Order (COR), including a detailed description of proposed change with supplementary or revised Drawings and specifications. Contractor will prepare and submit estimate within 14 days.

D. Contractor may propose changes by submitting a request for change to Architect, describing proposed change and its full effect on the Work. Include a statement describing reason for the change, and effect on Contract Sum/Price and Contract Time with full documentation. Document requested substitutions in accordance with Section 01600.

E. Stipulated Sum/Price Change Order: Based on Change Order Request and Contractor's fixed price quotation or Contractor's request for Change Order as approved by Architect.

F. Construction Change Directive: Architect may issue directive, on AIA Form G713 Construction Change Directive signed by Owner, instructing Contractor to proceed with change in the Work, for subsequent inclusion in a Change Order. Document will describe changes in the Work, and designate method of determining any change in Contract Sum/Price or Contract Time. Promptly execute change.

G. Maintain detailed records of work done on Time and Material Force Account basis. Provide full information required for evaluation of proposed changes, and to substantiate costs for changes in the Work.

H. Document each quotation for change in cost or time with sufficient data to allow evaluation of quotation.

I. Change Order Forms: AIA G701

J. Execution of Change Orders: Architect will issue Change Orders for signatures of parties as provided in Conditions of the Contract.

K. Correlation Of Contractor Submittals:
1. Promptly revise Schedule of Values and Application for Payment forms to record each authorized Change Order as separate line item and adjust Contract Sum/Price.
2. Promptly revise progress schedules to reflect change in Contract Time, revise sub-schedules to adjust times for other items of work affected by the change, and resubmit.
3. Promptly enter changes in Project Record Documents.

1.5 DEFECT ASSESSMENT

A. Replace the Work, or portions of the Work, not conforming to specified requirements.

B. If, in the opinion of the Architect, it is not practical to remove and replace the Work, the Architect will direct appropriate remedy or adjust payment.

C. Defective Work will be repaired to instructions of Architect

D. Authority of Architect to assess defects and identify payment adjustments is final.

E. Non-Payment For Rejected Products: Payment will not be made for rejected products for any of the following:
1. Products wasted or disposed of in a manner that is not acceptable.
2. Products determined as unacceptable before or after placement.
3. Products not completely unloaded from transporting vehicle.
4. Products placed beyond lines and levels of required Work.
5. Products remaining on hand after completion of the Work.
6. Loading, hauling, and disposing of rejected products.

1.6 CASH ALLOWANCES

A. Costs included in Cash Allowances: Cost of product to Contractor or Subcontractor, less applicable trade discounts, delivery to site and applicable taxes.

B. Costs Not Included in Cash Allowances But Included in Contract Sum/Price: Product and handling at site, including unloading, uncrating, and storage; protection of products from elements and from damage; and labor for installation, unless noted otherwise.

C. Architect Responsibilities:
1. Consult with Contractor for consideration and selection of products.
2. Select products in consultation with Owner and transmit decision to Contractor.
3. Prepare Change Order.

D. Contractor Responsibilities:

1. Assist Architect in selection of products.
2. Obtain proposals from suppliers and offer recommendations.
3. On notification of selection by Architect, execute purchase agreement with designated supplier.
4. Arrange for and process shop drawings, product data, and samples. Arrange for delivery.
5. Promptly inspect products upon delivery for completeness, damages, and defects. Submit claims for transportation damage.

E. Differences in costs will be adjusted by Change Order.

F. Allowances Schedule: The Contractor shall include in his base bid his cost to install the quantities listed in the Schedules. Unused quantities shall be credited to the Owner based upon the unit prices shown on the Schedule:

Allowances Schedule:

A. The following allowances include labor (L) and/or labor & material (L/M), or lump sum (LS) as noted, for furnishing and installing complete, in place, including but not limited to, support equipment, plumbing and electrical connections, and other related items necessary for complete in place system, as specified here-in, and/or as shown on the Drawings.

B. Allowances, including but not limited to the following:

1. **Allowance No. 1: Brick & Mortar Allowance:** Contractor shall allow $500 per thousand for Modular Size Face Brick & $15 per bag of colored mortar with final color, range, variation and type to be selected by the owner and architect. This allowance includes all handling and delivery charges. Allowance does not include taxes, labor, and any other related accessories. These costs shall be included by contractor in base bid. The contractor shall guarantee the quantity of brick for the project and provide this quantity on the Bid Form.

2. **Allowance No. 2: Signage Allowance**: Contractor shall allow $1,500.00 for signage allowance.

1.7 ALTERNATES

A. Alternates quoted on Bid Form will be reviewed and accepted or rejected at Owner's option. Accepted Alternates will be identified in Owner-Contractor Agreement.

B. Coordinate related work and modify surrounding work.

C. Schedule of Alternates:
Alternate Schedule:
1. **Alternate No 1: Builder's Risk Insurance**: Contractor to furnish a cost for Builder's Risk Insurance for the project based on a project budget estimate of **$1,700,000**. Include a wind deductable allowance of $30,000 for the policy.

*(**CLARIFICATION:** The Bid Form 00410 includes a line item to list the cost and would not be included in the base bid on page 1. This is an additive alternate for the owner to review and either accept or reject so you would fill in the amount and circle "add".)*

PART 2

PART 3 PRODUCTS

Not Used.

PART 4 EXECUTION

Not Used.

END OF SECTION

SECTION 01300

ADMINISTRATIVE REQUIREMENTS

PART 1 GENERAL

1.1 SECTION INCLUDES

A. Coordination and project conditions.

B. Field engineering.

C. Preconstruction meeting.

D. Site mobilization meeting.

E. Progress meetings.

F. Pre-installation meetings.

G. Cutting and patching.

H. Special procedures.

1.2 COORDINATION AND PROJECT CONDITIONS

A. Coordinate scheduling, submittals, and Work of various sections of Project Manual to ensure efficient and orderly sequence of installation of interdependent construction elements, with provisions for accommodating items installed later.

B. Verify utility requirements and characteristics of operating equipment are compatible with building utilities. Coordinate work of various sections having interdependent responsibilities for installing, connecting to, and placing in service, operating equipment.

C. Coordinate space requirements, supports, and installation of mechanical and electrical Work indicated diagrammatically on Drawings. Follow routing shown for pipes, ducts, and conduit, as closely as practicable; place runs parallel with lines of building. Utilize spaces efficiently to maximize accessibility for other installations, for maintenance, and for repairs.

D. In finished areas, conceal pipes, ducts, and wiring within construction. Coordinate locations of fixtures and outlets with finish elements.

E. Coordinate completion and clean-up of Work of separate sections in preparation for Substantial Completion.

F. After Owner occupancy of premises, coordinate access to site for correction of defective Work and Work not in accordance with Contract Documents, to minimize disruption of Owner's activities.

1.3 FIELD ENGINEERING

A. Employ Land Surveyor registered in State of Alabama and acceptable to Architect.

B. Contractor to locate and protect survey control and reference points. Promptly notify Architect of discrepancies discovered.

C. Control datum for survey is that established by Owner provided survey.

D. Verify set-backs and easements; confirm drawing dimensions and elevations.

E. Provide field engineering services. Establish elevations, lines, and levels, utilizing recognized engineering survey practices.

F. Submit copy of site drawing and certificate signed by Land Surveyor certifying elevations and locations of the Work are in conformance with Contract Documents.

G. Maintain complete and accurate log of control and survey work as Work progresses.

H. Protect survey control points prior to starting site work; preserve permanent reference points during construction.

I. Promptly report to Architect loss or destruction of reference point or relocation required because of changes in grades or other reasons.

J. Replace dislocated survey control points based on original survey control. Make no changes without prior written notice to.

1.4 PRECONSTRUCTION MEETING

A. Architect will schedule meeting after execution of Owner/Contractor agreement.

B. Attendance Required: Owner, Architect, Contractor and Subcontractors.

C. Agenda:
1. Submission of executed bonds and insurance certificates.
2. Distribution of Contract Documents.
3. Submission of list of Subcontractors, list of products, schedule of values, and progress schedule.
4. Designation of personnel representing parties in Contract, and Architect.
5. Procedures and processing of field decisions, submittals, and substitutions, applications for payments, proposal request, Change Orders, and Contract closeout procedures.
6. Scheduling.

D. Record minutes and distribute copies within two days after meeting to participants, with two copies to Architect and those affected by decisions made.

1.5 PROGRESS MEETINGS

A. Schedule and administer meetings throughout progress of the Work at maximum monthly intervals.

B. Make arrangements for meetings, prepare agenda with copies for participants, and preside at meetings.

C. Attendance Required: Job superintendent, major subcontractors and suppliers, Owner, and Architect, as appropriate to agenda topics for each meeting.

D. Agenda:
1. Review minutes of previous meetings.
2. Review of Work progress.
3. Field observations, problems, and decisions.
4. Identification of problems impeding planned progress.
5. Review of submittals schedule and status of submittals.
6. Review of off-site fabrication and delivery schedules.
7. Maintenance of progress schedule.
8. Corrective measures to regain projected schedules.
9. Planned progress during succeeding work period.
10. Coordination of projected progress.
11. Maintenance of quality and work standards.
12. Effect of proposed changes on progress schedule and coordination.
13. Other business relating to Work.

E. Record minutes and distribute copies within two days after meeting to participants, with two copies to, Owner, and those affected by decisions made.

1.6 PRE-INSTALLATION MEETINGS

A. When required in individual specification sections, convene pre-installation meetings at Project site prior to commencing work of specific section.

B. Require attendance of parties directly affecting, or affected by, Work of specific section.

C. Notify Architect four days in advance of meeting date.

D. Prepare agenda and preside at meeting:
1. Review conditions of installation, preparation and installation procedures.
2. Review coordination with related work.

E. Record minutes and distribute copies within two days after meeting to participants, with two copies to Architect, Engineer, Owner, and those affected by decisions made.

PART 2 PRODUCTS

Not Used.

PART 3 EXECUTION

3.1 CUTTING AND PATCHING

A. Employ skilled and experienced installer to perform cutting and patching.

B. Submit written request in advance of cutting or altering elements affecting:
   1. Structural integrity of element.
   2. Integrity of weather-exposed or moisture-resistant elements.
   3. Efficiency, maintenance, or safety of element.
   4. Visual qualities of sight exposed elements.
   5. Work of Owner or separate contractor.

C. Execute cutting, fitting, and patching including excavation and fill, to complete Work, and to:
   1. Fit the several parts together, to integrate with other Work.
   2. Uncover Work to install or correct ill-timed Work.
   3. Remove and replace defective and non-conforming Work.
   4. Remove samples of installed Work for testing.
   5. Provide openings in elements of Work for penetrations of mechanical and electrical Work.

D. Execute work by methods to avoid damage to other Work, and to provide proper surfaces to receive patching and finishing.

E. Cut masonry and concrete materials using masonry saw or core drill.

F. Restore Work with new products in accordance with requirements of Contract Documents.

G. Fit Work tight to pipes, sleeves, ducts, conduit, and other penetrations through surfaces.

H. Maintain integrity of wall, ceiling, or floor construction; completely seal voids.

I. At penetrations of fire rated walls, partitions, ceiling, or floor construction, completely seal voids with UL listed fire rated material in accordance with Section 07840, to full thickness of penetrated element.

J. Refinish surfaces to match adjacent finishes. For continuous surfaces, refinish to nearest intersection; for assembly, refinish entire unit.

K. Identify hazardous substances or conditions exposed during the Work to Architect for decision or remedy.

3.2 SPECIAL PROCEDURES

A. Materials: As specified in product sections; match existing with new products and salvaged products for patching and extending work.

B. Employ skilled and experienced installer to perform alteration work.

C. Cut, move, or remove items as necessary for access to alterations and renovation Work. Replace and restore at completion.

D. Remove unsuitable material not marked for salvage, including rotted wood, corroded metals, and deteriorated masonry and concrete. Replace materials as specified for finished Work.

E. Remove debris and abandoned items from area and from concealed spaces.

F. Prepare surface and remove surface finishes to permit installation of new work and finishes.

G. Close openings in exterior surfaces to protect existing work from weather and extremes of temperature and humidity.

H. Remove, cut, and patch Work in manner to minimize damage and to permit restoring products and finishes to original condition.

I. Refinish existing visible surfaces to remain in renovated rooms and spaces, to specified renewed condition for each material, with neat transition to adjacent finishes.

J. Where new Work abuts or aligns with existing, provide smooth and even transition. Patch Work to match existing adjacent Work in texture and appearance.

K. When finished surfaces are cut so that smooth transition with new Work is not possible, terminate existing surface along straight line at natural line of division and submit recommendation to Architect for review.

L. Where change of plane of 1/4 inch or more occurs, submit recommendation for providing smooth transition, to Architect for review.

M. Patch or replace portions of existing surfaces which are damaged, lifted, discolored, or showing other imperfections.

N. Finish surfaces as specified in individual product sections.

END OF SECTION

SECTION 01330

SUBMITTAL PROCEDURES

PART 1 GENERAL

1.1 SECTION INCLUDES

A. Submittal procedures.

B. Construction Progress Schedule

C. Proposed products list.

D. Product data.

E. Shop drawings.

F. Samples.

G. Design data.

H. Test reports.

I. Certificates.

J. Manufacturer's instructions.

K. Manufacturer's field reports.

L. Erection drawings.

1.2 SUBMITTAL PROCEDURES

A. Transmit each submittal with Architect accepted form.

B. Sequentially number transmittal forms. Mark revised submittals with original number and sequential alphabetic suffix.

C. Identify Project, Contractor, Subcontractor and Supplier; pertinent drawing and detail number, and Specification section number, appropriate to submittal.

D. Apply Contractor's stamp, signed or initialed certifying that review, approval, verification of products required, field dimensions, adjacent construction Work, and coordination of information is in accordance with requirements of the Work and Contract Documents.

E. Schedule submittals to expedite Project, and deliver to Architect at business address. Coordinate submission of related items.

F. For each submittal for review, allow 12 calendar days excluding delivery time to and from Contractor.

G. Identify variations from Contract Documents and product or system limitations which may be detrimental to successful performance of completed Work.

H. Allow space on submittals for Contractor and Architect/Engineer review stamps.

I. When revised for resubmission, identify changes made since previous submission.

J. Distribute copies of reviewed submittals as appropriate. Instruct parties to promptly report inability to comply with requirements.

K. Submittals not requested will not be recognized or processed.

1.3 CONSTRUCTION PROGRESS SCHEDULES

A. Prepare network analysis diagrams and supporting mathematical analyses using Critical Path Method, under concepts and methods outlined in AGC's "The Use of CPM in Construction - A Manual for General Contractors and the Construction Industry".

B. Show complete sequence of construction by activity, identifying Work of separate stages and other logically grouped activities. Indicate early and late start, early and late finish, float dates, and duration.

C. Indicate estimated percentage of completion for each item of Work at each submission.

D. Submit separate schedule of submittal dates for shop drawings, product data, and samples, including Owner furnished products and products identified under Allowances, and dates reviewed submittals will be required from Architect. Indicate decision dates for selection of finishes.

E. Indicate delivery dates for Owner furnished products and products identified under Allowances.

F. Revisions To Schedules:
   1. Indicate progress of each activity to date of submittal, and projected completion date of each activity.
   2. Identify activities modified since previous submittal, major changes in scope, and other identifiable changes.
   3. Prepare narrative report to define problem areas, anticipated delays, and impact on Schedule. Report corrective action taken, or proposed, and its effect including effect of changes on schedules of separate contractors.

1.4 PROPOSED PRODUCTS LIST

A. Within 15 days after date of Owner-Contractor Agreement, submit list of major products proposed for use, with name of manufacturer, trade name, and model number of each product.

B. For products specified only by reference standards, give manufacturer, trade name, model or catalog designation, and reference standards.

1.5 PRODUCT DATA

A. Product Data: Submit to Architect/Engineer for review for limited purpose of checking for conformance with information given and design concept expressed in Contract Documents.

B. Submit number of copies Contractor requires, plus two copies Architect will retain.

C. Mark each copy to identify applicable products, models, options, and other data. Supplement manufacturers' standard data to provide information specific to this Project.

D. Indicate product utility and electrical characteristics, utility connection requirements, and location of utility outlets for service for functional equipment and appliances.

E. After review, produce copies and distribute in accordance with SUBMITTAL PROCEDURES article and for record documents described in Section 01700.

1.6 SHOP DRAWINGS

A. Shop Drawings: Submit to Architect/Engineer for review for limited purpose of checking for conformance with information given and design concept expressed in Contract Documents.

B. Indicate special utility and electrical characteristics, utility connection requirements, and location of utility outlets for service for functional equipment and appliances.

C. Submit number of opaque reproductions Contractor requires, plus two copies Architect will retain.

D. After review, produce copies and distribute in accordance with SUBMITTAL PROCEDURES article and for record documents described in Section 01700.

1.7 SAMPLES

A. Samples: Submit to Architect/Engineer for review for limited purpose of checking for conformance with information given and design concept expressed in Contract Documents.

B. Samples For Selection as Specified in Product Sections:
   1. Submit to Architect/Engineer for aesthetic, color, or finish selection.
   2. Submit samples of finishes from full range of manufacturers' standard colors, in custom colors selected, textures, and patterns for Architect/Engineer selection.

C. Submit samples to illustrate functional and aesthetic characteristics of Products, with integral parts and attachment devices. Coordinate sample submittals for interfacing work.

D. Include identification on each sample, with full Project information.

E. Submit number of samples specified in individual specification sections; Architect/Engineer will retain one sample.

F. Reviewed samples which may be used in the Work are indicated in individual specification sections.

G. Samples will not be used for testing purposes unless specifically stated in specification section.

H. After review, produce duplicates and distribute in accordance with SUBMITTAL PROCEDURES article and for record documents purposes described in Section 01700.

1.8 DESIGN DATA

A. Submit for Architect's knowledge as contract administrator or for Owner.

B. Submit for information for limited purpose of assessing conformance with information given and design concept expressed in Contract Documents.

1.9 TEST REPORTS

A. Submit for Architect/Engineer's knowledge as contract administrator or for Owner.

B. Submit test reports for information for limited purpose of assessing conformance with information given and design concept expressed in Contract Documents.

1.10 CERTIFICATES

A. When specified in individual specification sections, submit certification by manufacturer, installation/application subcontractor, or Contractor to Architect/Engineer, in quantities specified for Product Data.

B. Indicate material or product conforms to or exceeds specified requirements. Submit supporting reference data, affidavits, and certifications as appropriate.

C. Certificates may be recent or previous test results on material or Product, but must be acceptable to Architect/Engineer.

1.11 MANUFACTURER'S INSTRUCTIONS

A. When specified in individual specification sections, submit printed instructions for delivery, storage, assembly, installation, start-up, adjusting, and finishing, to Architect/Engineer for delivery to Owner in quantities specified for Product Data.

B. Indicate special procedures, perimeter conditions requiring special attention, and special environmental criteria required for application or installation.

1.12 MANUFACTURER'S FIELD REPORTS

A. Submit reports for Architect/Engineer's benefit as contract administrator or for Owner.

B. Submit report in duplicate within 30 days of observation to Architect/Engineer for information.

C. Submit for information for limited purpose of assessing conformance with information given and design concept expressed in Contract Documents.

1.13 ERECTION DRAWINGS

A. Submit drawings for Architect/Engineer's benefit as contract administrator or for Owner.

B. Submit for information for limited purpose of assessing conformance with information given and design concept expressed in Contract Documents.

C. Data indicating inappropriate or unacceptable Work may be subject to action by Architect/Engineer or Owner.

PART 2 PRODUCTS

Not Used.

PART 3 EXECUTION

Not Used.

END OF SECTION

SECTION 01400

QUALITY REQUIREMENTS

PART 1 GENERAL

1.1 SECTION INCLUDES

A. Quality control and control of installation.

B. Tolerances

C. References.

D. Mock-up requirements.

E. Testing and inspection services.

F. Manufacturers' field services.

G. Examination.

H. Preparation.

1.2 QUALITY CONTROL AND CONTROL OF INSTALLATION

A. Monitor quality control over suppliers, manufacturers, products, services, site conditions, and workmanship, to produce Work of specified quality.

B. Comply with manufacturers' instructions, including each step in sequence.

C. When manufacturers' instructions conflict with Contract Documents, request clarification from Architect/Engineer before proceeding.

D. Comply with specified standards as minimum quality for the Work except where more stringent tolerances, codes, or specified requirements indicate higher standards or more precise workmanship.

E. Perform Work by persons qualified to produce required and specified quality.

F. Verify field measurements are as indicated on Shop Drawings or as instructed by manufacturer.

G. Secure products in place with positive anchorage devices designed and sized to withstand stresses, vibration, physical distortion, or disfigurement.

1.3 TOLERANCES

A. Monitor fabrication and installation tolerance control of products to produce acceptable Work. Do not permit tolerances to accumulate.

B. Comply with manufacturers' tolerances. When manufacturers' tolerances conflict with Contract Documents, request clarification from Architect/Engineer before proceeding.

C. Adjust products to appropriate dimensions; position before securing products in place.

1.4 REFERENCES

A. For products or workmanship specified by association, trade, or other consensus standards, comply with requirements of standard, except when more rigid requirements are specified or are required by applicable codes.

B. Conform to reference standard by date of issue current on date of Contract Documents, except where specific date is established by code.

C. Obtain copies of standards where required by product specification sections.

D. When specified reference standards conflict with Contract Documents, request clarification from Architect/Engineer before proceeding.

E. Neither contractual relationships, duties, nor responsibilities of parties in Contract nor those of Architect/Engineer shall be altered from Contract Documents by mention or inference otherwise in reference documents.

1.5 MOCK-UP REQUIREMENTS

A. Tests will be performed under provisions identified in this section and identified in respective product specification sections.

B. Assemble and erect specified items with specified attachment and anchorage devices, flashings, seals, and finishes.

C. Accepted mock-ups shall be comparison standard for remaining Work.

D. Where mock-up has been accepted by Architect/Engineer and is specified in product specification sections to be removed; remove mock-up and clear area when directed to do so by Architect/Engineer.

1.6 TESTING AND INSPECTION SERVICES

A. The Owner shall engage and pay for the services of an independent testing laboratory to perform inspections and tests of materials and construction as defined in the General Conditions: Except that in the event of a test failure the Contractor shall pay for retesting and except for testing specified in Division 15.

B. The independent firm will perform tests, inspections and other services specified in individual specification sections and as required by Architect/Engineer.
   1. Laboratory: Authorized to operate in State of Alabama.
   2. Laboratory Staff: Maintain full time specialist on staff to review services.
   3. Testing Equipment: Calibrated at reasonable intervals with devices of an accuracy, traceable to National Bureau of Standards or accepted values of natural physical constants.

C. Testing, inspections and source quality control may occur on or off project site. Perform off-site testing as required by Architect/Engineer or Owner.

D. Reports will be submitted by independent firm to Architect/Engineer and Contractor, in duplicate, indicating observations and results of tests and indicating compliance or non-compliance with Contract Documents.

E. Cooperate with independent firm; furnish samples of materials, design mix, equipment, tools, storage, safe access, and assistance by incidental labor as requested.
   1. Notify Architect/Engineer and independent firm 24 hours prior to expected time for operations requiring services.
   2. Make arrangements with independent firm and pay for additional samples and tests required for Contractor's use.

F. Testing and employment of testing agency or laboratory shall not relieve Contractor of obligation to perform Work in accordance with requirements of Contract Documents.

G. Re-testing or re-inspection required because of non-conformance to specified requirements shall be performed by same independent firm on instructions by Architect/Engineer. Payment for re-testing or re-inspection will be charged to Contractor by deducting testing charges from Contract Sum/Price.

H. Agency Responsibilities:
   1. Test samples of mixes submitted by Contractor.
   2. Provide qualified personnel at site. Cooperate with Architect/Engineer and Contractor in performance of services.
   3. Perform specified sampling and testing of products in accordance with specified standards.
   4. Ascertain compliance of materials and mixes with requirements of Contract Documents.
   5. Promptly notify Architect/Engineer and Contractor of observed irregularities or non-conformance of Work or products.
   6. Perform additional tests required by Architect/Engineer.
   7. Attend preconstruction meetings and progress meetings.

I. Agency Reports: After each test, promptly submit two copies of report to Architect/Engineer and to Contractor. When requested by Architect/Engineer, provide interpretation of test results. Include the following:
   1. Date issued.
   2. Project title and number.
   3. Name of inspector.
   4. Date and time of sampling or inspection.
   5. Identification of product and specifications section.
   6. Location in Project.
   7. Type of inspection or test.
   8. Date of test.
   9. Results of tests.
   10. Conformance with Contract Documents.

J. Limits On Testing Authority:

1. Agency or laboratory may not release, revoke, alter, or enlarge on requirements of Contract Documents.
2. Agency or laboratory may not approve or accept any portion of the Work.
3. Agency or laboratory may not assume duties of Contractor.
4. Agency or laboratory has no authority to stop the Work.

1.7 MANUFACTURERS' FIELD SERVICES

A. When specified in individual specification sections, require material or product suppliers or manufacturers to provide qualified staff personnel to observe site conditions, conditions of surfaces and installation, quality of workmanship, start-up of equipment, and test, adjust and balance of equipment as applicable, and to initiate instructions when necessary.

B. Submit qualifications of observer 30 days in advance of required observations. Observer subject to approval of Architect/Engineer.

C. Report observations and site decisions or instructions given to applicators or installers that are supplemental or contrary to manufacturers' written instructions.

D. Refer to Section 01330 - SUBMITTAL PROCEDURES, MANUFACTURERS' FIELD REPORTS article.

PART 2 PRODUCTS

Not Used.

PART 3 EXECUTION

3.1 EXAMINATION

A. Verify existing site conditions and substrate surfaces are acceptable for subsequent Work. Beginning new Work means acceptance of existing conditions.

B. Verify existing substrate is capable of structural support or attachment of new Work being applied or attached.

C. Examine and verify specific conditions described in individual specification sections.

D. Verify utility services are available, of correct characteristics, and in correct locations.

3.2 PREPARATION

A. Clean substrate surfaces prior to applying next material or substance.

B. Seal cracks or openings of substrate prior to applying next material or substance.

C. Apply manufacturer required or recommended substrate primer, sealer, or conditioner prior to applying new material or substance in contact or bond.

END OF SECTION

SECTION 01500

TEMPORARY FACILITIES AND CONTROLS

PART 1 GENERAL

1.1 SECTION INCLUDES

A. Temporary Utilities:
   1. Temporary electricity.
   2. Temporary lighting for construction purposes.
   3. Temporary heating.
   4. Temporary cooling.
   5. Temporary ventilation.
   6. Telephone service.
   7. Facsimile service.
   8. Temporary water service.
   9. Temporary sanitary facilities.

B. Construction Facilities:
   1. Field offices and sheds.
   2. Vehicular access.
   3. Parking.
   4. Progress cleaning and waste removal.
   5. Project identification.
   6. Traffic regulation.

C. Temporary Controls:
   1. Partitions
   2. Barriers.
   3. Enclosures and fencing.
   4. Security.
   5. Water control.
   6. Dust control.
   7. Erosion and sediment control.
   8. Noise control.
   9. Pest control.
   10. Pollution control.
   11. Rodent control.

D. Removal of utilities, facilities, and controls.

1.2 TEMPORARY ELECTRICITY

A. Provide and pay for power service required from utility source as needed for construction operation.

B. Complement existing power service capacity and characteristics as required for construction operations.

C. Provide power outlets, with branch wiring and distribution boxes located as required for construction operations. Provide flexible power cords as required for portable construction tools and equipment.

D. Provide main service disconnect and over-current protection at convenient location.

E. Permanent convenience receptacles may be utilized during construction.

1.3 TEMPORARY LIGHTING FOR CONSTRUCTION PURPOSES

A. Provide and maintain incandescent lighting for construction operations to achieve minimum lighting level of 2 watt/sq ft.

B. Provide and maintain 1 watt/sq ft lighting to exterior staging and storage areas entire site after dark for security purposes.

C. Provide and maintain 0.25 watt/sq ft HID lighting to interior work areas after dark for security purposes.

D. Provide branch wiring from power source to distribution boxes with lighting conductors, pigtails, and lamps for specified lighting levels.

E. Maintain lighting and provide routine repairs.

F. Permanent building lighting may be utilized during construction.

1.4 TEMPORARY HEATING

A. Provide and pay for heating devices and heat as needed to maintain specified conditions for construction operations.

B. Prior to operation of permanent equipment for temporary heating purposes, verify installation is approved for operation, equipment is lubricated and filters are in place. Provide and pay for operation, maintenance, and regular replacement of filters and worn or consumed parts.

1.5 TEMPORARY COOLING

A. Provide and pay for cooling devices and cooling as needed to maintain specified conditions for construction operations.

B. Prior to operation of permanent equipment for temporary cooling purposes, verify installation is approved for operation, equipment is lubricated and filters are in place. Provide and pay for operation, maintenance, and regular replacement of filters and worn or consumed parts.

1.6 TEMPORARY VENTILATION

A. Ventilate enclosed areas to achieve curing of materials, to dissipate humidity, and to prevent accumulation of dust, fumes, vapors, or gases.

1.7 TELEPHONE SERVICE

A. Provide, maintain, and pay for telephone service to field office at time of project mobilization.

1.8 FACSIMILE SERVICE

A. Provide, maintain and pay for facsimile service and dedicated telephone line to field office at time of project mobilization.

1.9 TEMPORARY WATER SERVICE

A. Provide and pay for suitable quality water service as needed to maintain specified conditions for construction operations. Connect to existing water source.

1.10 TEMPORARY SANITARY FACILITIES

A. Provide and maintain required facilities and enclosures.

B. At end of construction, return existing facilities used for construction operations to same or better condition as original condition.

1.11 FIELD OFFICES AND SHEDS

A. Office: Weather tight, with lighting, electrical outlets, heating, cooling and ventilating equipment, and equipped with sturdy furniture.

B. Provide space for Project meetings, with table and chairs to accommodate 8 persons.

C. Storage Areas And Sheds: Size to storage requirements for products of individual Sections, allowing for access and orderly provision for maintenance and for inspection of products to requirements of Section 01600.

D. Preparation: Fill and grade sites for temporary structures sloped for drainage away from buildings.

1.12 VEHICULAR ACCESS

A. Construct temporary all-weather access roads from public thoroughfares as required to serve construction area, of width and load bearing capacity to accommodate unimpeded traffic for construction purposes.

B. Extend and relocate vehicular access, as Work progress requires, provide detours as necessary for unimpeded traffic flow.

C. Location as indicated on Drawings approved by Architect.

D. Provide unimpeded access for emergency vehicles. Maintain 20 feet wide driveways with turning space between and around combustible materials.

E. Provide and maintain access to fire hydrants and control valves free of obstructions.

F. Provide means of removing mud from vehicle wheels before entering streets.

G. Do not use designated existing on-site roads for construction traffic.

1.13 PARKING

A. Construct temporary gravel surface parking areas to accommodate construction personnel.

B. Locate as approved by Architect.

C. When site space is not adequate, provide additional off-site parking.

D. Use of existing on-site streets and driveways used for construction traffic is not permitted. Tracked vehicles not allowed on paved areas.

E. Use of designated areas of existing parking facilities used by construction personnel is not permitted.

F. Do not allow heavy vehicles or construction equipment in parking areas.

G. Do not allow vehicle parking on existing pavement.

H. Maintenance:
   1. Maintain traffic and parking areas in sound condition free of excavated material, construction equipment, products, and mud.
   2. Maintain existing paved areas used for construction; promptly repair breaks, potholes, low areas, standing water, and other deficiencies, to maintain paving and drainage in original, or specified, condition.

I. Removal, Repair:
   1. Remove temporary materials and construction before Substantial Completion.
   2. Repair existing facilities damaged by use, to original condition.

J. Mud From Site Vehicles: Provide means of removing mud from vehicle wheels before entering streets.

1.14 PROGRESS CLEANING AND WASTE REMOVAL

A. Maintain areas free of waste materials, debris, and rubbish. Maintain site in clean and orderly condition.

B. Remove debris and rubbish from pipe chases, plenums, attics, crawl spaces, and other closed or remote spaces, prior to enclosing spaces.

C. Broom and vacuum clean interior areas prior to start of surface finishing, and continue cleaning to eliminate dust.

D. Collect and remove waste materials, debris, and rubbish from site periodically and dispose off-site.

E. Open free-fall chutes are not permitted. Terminate closed chutes into appropriate containers with lids.

1.15 PROJECT IDENTIFICATION

A. Project Identification Sign:
   1. One painted sign, 8 x 8 x ¾" plywood on 4 x 4 posts, painted with graphics provided by Architect design, and content Drawings, location designated.

B. Project Informational Signs:
   1. Painted informational signs of same colors and lettering as Project Identification sign, or standard products; size lettering for legibility at 100 feet distance.
   2. Provide sign at each field office, storage shed, and directional signs to direct traffic into and within site. Relocate as Work progress requires.
   3. No other signs are allowed without Owner permission except those required by law.

C. Finishes, Painting: Adequate to withstand weathering, fading, and chipping for duration of construction.

D. Installation:
   1. Install project identification sign within 15 days after date fixed by Notice to Proceed.
   2. Erect at location approved by Owner.
   3. Erect supports and framing on secure foundation, rigidly braced and framed to resist wind loadings.
   4. Install sign surface plumb and level, with butt joints. Anchor securely.
   5. Paint exposed surfaces of sign, supports, and framing.

E. Maintenance: Maintain signs and supports clean, repair deterioration and damage.

F. Removal: Remove signs, framing, supports, and foundations at completion of Project and restore area.

1.16 PARTITIONS

A. Construct temporary partitions to be air tight in locations as required by phasing plans. Construct temporary exit corridors as shown on phasing plans of non-combustible materials.

1.17 TRAFFIC REGULATION

A. Signs, Signals, And Devices:
   1. Post Mounted and Wall Mounted Traffic Control and Informational Signs: As approved by authority having jurisdiction.
   2. Traffic Cones and Drums, Flares and Lights: As approved by authority having jurisdiction.
   3. Flagperson Equipment: As required by authority having jurisdiction.

B. Flag Persons: Provide trained and equipped flag persons to regulate traffic when construction operations or traffic encroach on public traffic lanes.

C. Haul Routes:
   1. Consult with authority having jurisdiction, establish public thoroughfares to be used for haul routes and site access.
   2. Confine construction traffic to designated haul routes.
   3. Provide traffic control at critical areas of haul routes to regulate traffic, to minimize interference with public traffic.

D. Removal:
   1. Remove equipment and devices when no longer required.
   2. Repair damage caused by installation.

1.18 BARRIERS

A. Provide barriers to prevent unauthorized entry to construction areas and to protect existing facilities and adjacent properties from damage from construction operations and demolition.

B. Provide barricades and covered walkways required by authorities having jurisdiction for public rights-of-way.

C. Provide protection for plants designated to remain. Replace damaged plants.

D. Protect non-owned vehicular traffic, stored materials, site, and structures from damage.

1.19 ENCLOSURES AND FENCING

A. Construction: Commercial grade chain link fence.

B. Provide 6 feet high fence around construction site; equip with vehicular and pedestrian gates with locks.

C. Exterior Enclosures:
   1. Provide temporary weather tight closure of exterior openings to accommodate acceptable working conditions and protection for products, to allow for temporary heating and maintenance of required ambient temperatures identified

in individual specification sections, and to prevent entry of unauthorized persons. Provide access doors with self-closing hardware and locks.

1.20 SECURITY

A. Security Program:
1. Protect Work from theft, vandalism, and unauthorized entry.

1.21 WATER CONTROL

A. Grade site to drain. Maintain excavations free of water. Provide, operate, and maintain pumping equipment.

B. Protect site from puddling or running water. Provide water barriers as required to protect site from soil erosion

1.22 DUST CONTROL

A. Execute Work by methods to minimize raising dust from construction operations.

B. Provide positive means to prevent air-borne dust from dispersing into atmosphere.

1.23 EROSION AND SEDIMENT CONTROL

A. Plan and execute construction by methods to control surface drainage from cuts and fills, from borrow and waste disposal areas. Prevent erosion and sedimentation.

B. Minimize surface area of bare soil exposed at one time.

C. Provide temporary measures including berms, dikes, and drains, and other devices to prevent water flow.

D. Construct fill and waste areas by selective placement to avoid erosive surface silts or clays.

E. Periodically inspect earthwork to detect evidence of erosion and sedimentation; promptly apply corrective measures.

1.24 NOISE CONTROL

A. Provide methods, means, and facilities to minimize noise produced by construction operations.

B. Radios are not allowed on site.

1.25 PEST CONTROL

A. Provide methods, means, and facilities to prevent pests and insects from damaging the Work and entering facility.

1.26 POLLUTION CONTROL

A. Provide methods, means, and facilities to prevent contamination of soil, water, and atmosphere from discharge of noxious, toxic substances, and pollutants produced by construction operations.

B. Comply with pollution and environmental control requirements of authorities having jurisdiction.

1.27 RODENT CONTROL

A. Provide methods, means, and facilities to prevent rodents from accessing or invading premises.

1.28 REMOVAL OF UTILITIES, FACILITIES, AND CONTROLS

A. Remove temporary utilities, equipment, facilities, and materials, prior to Substantial Completion Final Application for Payment inspection.

B. Remove underground installations to minimum depth of 2 feet. Grade site as indicated on Drawings.

C. Clean and repair damage caused by installation or use of temporary work.

D. Restore existing and permanent facilities used during construction to original condition. Restore permanent facilities used during construction to specified condition.

PART 2 PRODUCTS

Not Used.

PART 3 EXECUTION

Not Used.

END OF SECTION

SECTION 01600

PRODUCT REQUIREMENTS

PART 1 GENERAL

1.1 SECTION INCLUDES

A. Products.

B. Product delivery requirements.

C. Product storage and handling requirements.

D. Product options.

E. Product substitution procedures.

F. Equipment electrical characteristics and components.

1.2 PRODUCTS

A. Furnish products of qualified manufacturers suitable for intended use. Furnish products of each type by single manufacturer unless specified otherwise.

B. Do not use materials and equipment removed from existing premises, except as specifically permitted by Contract Documents.

C. Furnish interchangeable components from same manufacturer for components being replaced.

1.3 PRODUCT DELIVERY REQUIREMENTS

A. Transport and handle products in accordance with manufacturer's instructions.

B. Promptly inspect shipments to ensure products comply with requirements, quantities are correct, and products are undamaged.

C. Provide equipment and personnel to handle products by methods to prevent soiling, disfigurement, or damage.

1.4 PRODUCT STORAGE AND HANDLING REQUIREMENTS

A. Store and protect products in accordance with manufacturers' instructions.

B. Store with seals and labels intact and legible.

C. Store sensitive products in weather tight, climate controlled, enclosures in an environment favorable to product.

D. For exterior storage of fabricated products, place on sloped supports above ground.

E. Cover products subject to deterioration with impervious sheet covering. Provide ventilation to prevent condensation and degradation of products.

F. Store loose granular materials on solid flat surfaces in well-drained area. Prevent mixing with foreign matter.

G. Provide equipment and personnel to store products by methods to prevent soiling, disfigurement, or damage.

H. Arrange storage of products to permit access for inspection. Periodically inspect to verify products are undamaged and are maintained in acceptable condition.

1.5 PRODUCT OPTIONS

A. Products Specified by Reference Standards or by Description Only: Any product meeting those standards or description.

B. Products Specified by Naming One or More Manufacturers: Products of one of manufacturers named and meeting specifications, no options or substitutions allowed.

C. Products Specified by Naming One or More Manufacturers with Provision for Substitutions: Submit request for substitution for any manufacturer not named in accordance with the following article.

1.6 PRODUCT SUBSTITUTION PROCEDURES

A. Instructions to Bidders specify time restrictions for submitting requests for Substitutions during bidding period.

B. Substitutions may be considered when a product becomes unavailable through no fault of Contractor.

C. Document each request with complete data substantiating compliance of proposed Substitution with Contract Documents.

D. A request constitutes a representation that Contractor:
   1. Has investigated proposed product and determined that it meets or exceeds quality level of specified product.
   2. Will provide same warranty for Substitution as for specified product.
   3. Will coordinate installation and make changes to other Work which may be required for the Work to be complete with no additional cost to Owner.
   4. Waives claims for additional costs or time extension which may subsequently become apparent.
   5. Will reimburse Owner and Architect for review or redesign services associated with re-approval by authorities having jurisdiction.

E. Substitutions will not be considered when they are indicated or implied on Shop Drawing or Product Data submittals, without separate written request, or when acceptance will require revision to Contract Documents.

F. Substitution Submittal Procedure:
   1. Submit three copies of request for Substitution for consideration. Limit each request to one proposed Substitution.
   2. Submit Shop Drawings, Product Data, and certified test results attesting to proposed product equivalence. Burden of proof is on proposer.
   3. Architect/Engineer will notify Contractor in writing of decision to accept or reject request.

PART 2 PRODUCTS

2.1 EQUIPMENT ELECTRICAL CHARACTERISTICS AND COMPONENTS

A. Wiring Terminations: Furnish terminal lugs to match branch circuit conductor quantities, sizes, and materials indicated. Include lugs for terminal box.

B. Cord and Plug: Furnish minimum 6 foot cord and plug including grounding connector for connection to electric wiring system. Cord of longer length is specified in individual specification sections.

PART 3 EXECUTION

Not Used.

END OF SECTION

SECTION 01700

EXECUTION REQUIREMENTS

PART 1 GENERAL

1.1 SECTION INCLUDES

A. Closeout procedures.

B. Final cleaning.

C. Starting of systems.

D. Demonstration and instructions.

E. Testing, adjusting and balancing.

F. Protecting installed construction.

G. Project record documents.

H. Operation and maintenance data.

I. Manual for materials and finishes.

J. Manual for equipment and systems.

K. Spare parts and maintenance products.

L. Product warranties and product bonds.

M. Maintenance service.

1.2 CLOSEOUT PROCEDURES

A. Submit written certification that Contract Documents have been reviewed, Work has been inspected, and that Work is complete in accordance with Contract Documents and ready for Architect/Engineer's review.

B. Provide submittals to Architect required by authorities having jurisdiction.

C. Submit final Application for Payment identifying total adjusted Contract Sum, previous payments, and sum remaining due.

D. Owner will occupy all portions of building as specified in Section 01100.

1.3 FINAL CLEANING

A. Execute final cleaning prior to final project assessment.

B. Clean interior and exterior glass, surfaces exposed to view; remove temporary labels, stains and foreign substances, polish transparent and glossy surfaces, vacuum carpeted and soft surfaces.

C. Clean equipment and fixtures to sanitary condition with cleaning materials appropriate to surface and material being cleaned.

D. Replace filters of operating equipment.

E. Clean debris from roofs, gutters, downspouts, and drainage systems.

F. Clean site; sweep paved areas, rake clean landscaped surfaces.

G. Remove waste and surplus materials, rubbish, and construction facilities from site.

1.4 STARTING OF SYSTEMS

A. Coordinate schedule for start-up of various equipment and systems.

B. Notify Architect and Owner seven days prior to start-up of each item.

C. Verify each piece of equipment or system has been checked for proper lubrication, drive rotation, belt tension, control sequence, and for conditions which may cause damage.

D. Verify tests, meter readings, and specified electrical characteristics agree with those required by equipment or system manufacturer.

E. Verify wiring and support components for equipment are complete and tested.

F. Execute start-up under supervision of applicable manufacturer's representative in accordance with manufacturers' instructions.

G. When specified in individual specification Sections, require manufacturer to provide authorized representative to be present at site to inspect, check, and approve equipment or system installation prior to start-up, and to supervise placing equipment or system in operation.

H. Submit a written report in accordance with Section 01330 that equipment or system has been properly installed and is functioning correctly.

1.5 DEMONSTRATION AND INSTRUCTIONS

A. Demonstrate operation and maintenance of products to Owner's personnel one week prior to date of Substantial Completion.

B. For equipment or systems requiring seasonal operation, perform demonstration for other season within six months.

C. Utilize operation and maintenance manuals as basis for instruction. Review contents of manual with Owner's personnel in detail to explain all aspects of operation and maintenance.

D. Demonstrate start-up, operation, control, adjustment, trouble-shooting, servicing, maintenance, and shutdown of each item of equipment at scheduled time, at equipment location.

E. Prepare and insert additional data in operations and maintenance manuals when need for additional data becomes apparent during instruction.

F. Required instruction time for each item of equipment and system is specified in individual sections.

1.6 TESTING, ADJUSTING AND BALANCING

A. Independent firm will perform services specified in mechanical sections.

B. Reports will be submitted by independent firm to Architect indicating observations and results of tests and indicating compliance or non-compliance with requirements of Contract Documents.

1.7 PROTECTING INSTALLED CONSTRUCTION

A. Protect installed Work and provide special protection where specified in individual specification sections.

B. Provide temporary and removable protection for installed products. Control activity in immediate work area to prevent damage.

C. Provide protective coverings at walls, projections, jambs, sills, and soffits of openings.

D. Protect finished floors, stairs, and other surfaces from traffic, dirt, wear, damage, or movement of heavy objects, by protecting with durable sheet materials.

E. Prohibit traffic or storage upon waterproofed or roofed surfaces. When traffic or activity is necessary, obtain recommendations for protection from waterproofing or roofing material manufacturer.

F. Prohibit traffic from landscaped areas.

1.8 PROJECT RECORD DOCUMENTS

A. Maintain on site one set of the following record documents; record actual revisions to the Work:
   1. Drawings.

2. Specifications.
3. Addenda.
4. Change Orders and other modifications to the Contract.
5. Reviewed Shop Drawings, Product Data, and Samples.
6. Manufacturer's instruction for assembly, installation, and adjusting.

B. Ensure entries are complete and accurate, enabling future reference by Owner.

C. Store record documents separate from documents used for construction.

D. Record information concurrent with construction progress, not less than weekly.

E. Specifications: Legibly mark and record at each product section description of actual products installed, including the following:
1. Manufacturer's name and product model and number.
2. Product substitutions or alternates utilized.
3. Changes made by Addenda and modifications.

F. Record Drawings: Legibly mark each item to record actual construction including:
1. Measured depths of foundations in relation to finish first main floor datum.
2. Measured horizontal and vertical locations of underground utilities and appurtenances, referenced to permanent surface improvements.
3. Measured locations of internal utilities and appurtenances concealed in construction, referenced to visible and accessible features of the Work.
4. Field changes of dimension and detail.
5. Details not on original Contract drawings.

G. Submit documents to Architect with claim for final Application for Payment.

1.9 OPERATION AND MAINTENANCE DATA

A. Submit data bound in 8-1/2 x 11 inch (A4) text pages, three D side ring binders with durable plastic covers.

B. Prepare binder cover with printed title "OPERATION AND MAINTENANCE INSTRUCTIONS", title of project, and subject matter of binder when multiple binders are required.

C. Internally subdivide binder contents with permanent page dividers, logically organized as described below; with tab titling clearly printed under reinforced laminated plastic tabs.

D. Drawings: Provide with reinforced punched binder tab. Bind in with text; fold larger drawings to size of text pages.

E. Contents: Prepare Table of Contents for each volume, with each product or system description identified, typed on white paper, in three parts as follows:
1. Part 1: Directory, listing names, addresses, and telephone numbers of Architect/Engineer, Contractor, Subcontractors, and major equipment suppliers.

2. Part 2: Operation and maintenance instructions, arranged by system and subdivided by specification section. For each category, identify names, addresses, and telephone numbers of Subcontractors and suppliers. Identify the following:
    a. Significant design criteria.
    b. List of equipment.
    c. Parts list for each component.
    d. Operating instructions.
    e. Maintenance instructions for equipment and systems.
    f. Maintenance instructions for special finishes, including recommended cleaning methods and materials, and special precautions identifying detrimental agents.
3. Part 3: Project documents and certificates, including the following:
    a. Shop drawings and product data.
    b. Air and water balance reports.
    c. Certificates.
    d. Originals Photocopies of warranties and bonds.

1.10 MANUAL FOR MATERIALS AND FINISHES

A. Submit two copies of preliminary draft or proposed formats and outlines of contents before start of Work. Architect will review draft and return one copy with comments.

B. For equipment, or component parts of equipment put into service during construction and operated by Owner, submit documents within ten days after acceptance.

C. Submit one copy of completed volumes 15 days prior to final inspection. Draft copy be reviewed and returned with Architect comments. Revise content of document sets as required prior to final submission.

D. Submit two sets of revised final volumes in final form within 10 days after final inspection.

E. Building Products, Applied Materials, and Finishes: Include product data, with catalog number, size, composition, and color and texture designations. Include information for re-ordering custom manufactured products.

F. Instructions for Care and Maintenance: Include manufacturer's recommendations for cleaning agents and methods, precautions against detrimental agents and methods, and recommended schedule for cleaning and maintenance.

G. Moisture Protection and Weather Exposed Products: Include product data listing applicable reference standards, chemical composition, and details of installation. Include recommendations for inspections, maintenance, and repair.

H. Additional Requirements: As specified in individual product specification sections.

I. Include listing in Table of Contents for design data, with tabbed fly sheet and space for insertion of data.

1.11 MANUAL FOR EQUIPMENT AND SYSTEMS

A. Submit two copies of preliminary draft or proposed formats and outlines of contents before start of Work. Architect/Engineer will review draft and return one copy with comments.

B. For equipment, or component parts of equipment put into service during construction and operated by Owner, submit documents within ten days after acceptance.

C. Submit one copy of completed volumes 15 days prior to final inspection. Draft copy be reviewed and returned after final inspection, with Architect/Engineer comments. Revise content of document sets as required prior to final submission.

D. Submit two sets of revised final volumes in final form within 10 days after final inspection.

E. Each Item of Equipment and Each System: Include description of unit or system, and component parts. Identify function, normal operating characteristics, and limiting conditions. Include performance curves, with engineering data and tests, and complete nomenclature and model number of replaceable parts.

F. Panelboard Circuit Directories: Provide electrical service characteristics, controls, and communications; by label machine.

G. Include color-coded wiring diagrams as installed.

H. Operating Procedures: Include start-up, break-in, and routine normal operating instructions and sequences. Include regulation, control, stopping, shut-down, and emergency instructions. Include summer, winter, and special operating instructions.

I. Maintenance Requirements: Include routine procedures and guide for preventative maintenance and troubleshooting; disassembly, repair, and reassembly instructions; and alignment, adjusting, balancing, and checking instructions.

J. Include servicing and lubrication schedule, and list of lubricants required.

K. Include manufacturer's printed operation and maintenance instructions.

L. Include sequence of operation by controls manufacturer.

M. Include original manufacturer's parts list, illustrations, assembly drawings, and diagrams required for maintenance.

N. Include control diagrams by controls manufacturer as installed.

O. Include Contractor's coordination drawings, with color-coded piping diagrams as installed.

P. Include charts of valve tag numbers, with location and function of each valve, keyed to flow and control diagrams.

Q. Include list of original manufacturer's spare parts, current prices, and recommended quantities to be maintained in storage.

R. Include test and balancing reports as specified in Section 01400.

S. Additional Requirements: As specified in individual product specification sections.

T. Include listing in Table of Contents for design data, with tabbed dividers and space for insertion of data.

1.12 SPARE PARTS AND MAINTENANCE PRODUCTS

A. Furnish spare parts, maintenance, and extra products in quantities specified in individual specification sections.

B. Deliver to Project site and place in location as directed by Owner; obtain receipt prior to final payment.

1.13 PRODUCT WARRANTIES AND PRODUCT BONDS

A. Obtain warranties and bonds executed in duplicate by responsible subcontractors, suppliers, and manufacturers, within ten days after completion of applicable item of work.

B. Execute and assemble transferable warranty documents and bonds from subcontractors, suppliers, and manufacturers.

C. Verify documents are in proper form, contain full information, and are notarized.

D. Co-execute submittals when required.

E. Include Table of Contents and assemble in three D side ring binder with durable plastic cover.

F. Submit prior to final Application for Payment.

G. Time Of Submittals:
   1. For equipment or component parts of equipment put into service during construction with Owner's permission, submit documents within ten days after acceptance.
   2. Make other submittals within ten days after Date of Substantial Completion, prior to final Application for Payment.
   3. For items of Work for which acceptance is delayed beyond Date of Substantial Completion, submit within ten days after acceptance, listing date of acceptance as beginning of warranty or bond period.

1.14 MAINTENANCE SERVICE

A. Furnish service and maintenance of components indicated in specification sections for one year from date of Substantial Completion.

B. Examine system components at frequency consistent with reliable operation. Clean, adjust, and lubricate as required.

C. Include systematic examination, adjustment, and lubrication of components. Repair or replace parts whenever required. Use parts produced by manufacturer of original component.

D. Do not assign or transfer maintenance service to agent or Subcontractor without prior written consent of Owner.

PART 2 PRODUCTS

Not Used.

PART 3 EXECUTION

Not Used.

END OF SECTION

DIVISION 2

SITE WORK

SECTION 02362

TERMITE CONTROL

PART 1 GENERAL

1.1 SUMMARY

A. Section Includes:
   1. Soil treatment for termite control.

B. Related Sections:
   1. Section 03300 - Cast-In-Place Concrete: Slabs on grade and foundations placed over treated soil.

1.2 REFERENCES

A. Environmental Protection Agency:
   1. EPA FIFRA - Federal Insecticide, Fungicide and Rodenticide Act.

B. National Pest Management Association:
   1. NPMA WDO - Wood Destroying Organism Library.

1.3 SUBMITTALS

A. Section 01330 - Submittal Procedures: Submittal procedures.

B. Product Data: Submit toxicants to be used, composition by percentage, dilution schedule, intended application rate. Include product label information.

C. Test Reports: Indicate regulatory agency approval reports.

D. Manufacturer's Application Instructions: Indicate caution requirements and in accordance with current product label of chosen pesticide.

E. Manufacturer's Certificate: Certify Products meet or exceed specified requirements.

F. Certify applications followed NPMA WDO for termite control or other regional location guidance.

1.4 CLOSEOUT SUBMITTALS

A. Section 01700 - Execution Requirements: Requirements for submittals.

B. Project Record Documents: Record date and rate of application, and areas of application.

C. Operation and Maintenance Data: Indicate re-treatment schedule and.

1.5 QUALIFICATIONS

A. Manufacturer: Company specializing in manufacturing Products specified in this section with minimum documented experience.

B. Applicator: Company specializing in performing the Work of this section with documented experience approved by manufacturer and licensed in State of Louisiana.

1.6 SEQUENCING

A. Section 01100 - Summary: Work sequence.

B. Apply toxicant immediately prior to installation of vapor barrier under slabs-on-grade in accordance with product label supplemented by the NPCA’s ARP for termiticiding or local requirements.

1.7 WARRANTY

A. Section 01700 - Execution Requirements: Requirements for warranties.

B. Furnish five-year warranty.

C. Warranty: Include coverage for damage and repairs to building and building contents caused by termites. Repair damage. Re-treat where required.

D. Inspect, report and treat annually to Owner in writing.

PART 2 PRODUCTS

2.1 MATERIALS

A. Manufacturers:
   1. Environmental Chemical Corp., or equal.
   2. Randustrial, or equal.
   3. Webtec, Inc., or equal.

B. Toxicant Chemical: EPA FIFRA approved; synthetically color dyed to permit visual identification of treated soil.

C. Diluent: Recommended by toxicant manufacturer.

2.2 MIXES

A. Mix toxicant to manufacturer's instructions.

PART 3 EXECUTION

3.1 EXAMINATION

A. Section 01300 - Administrative Requirements: Verification of existing conditions before starting work.

B. Verify soil surfaces are unfrozen, sufficiently dry to absorb toxicant, and ready to receive treatment.

C. Verify final grading and excavation is complete.

3.2 APPLICATION

A. Apply toxicant at locations indicated in Schedule at end of section.

B. Apply extra treatment to structure penetration surfaces including pipe or ducts, and soil penetrations including grounding rods or posts.

C. Re-treat disturbed treated soil with same toxicant as original treatment.

D. When inspection or testing identifies presence of termites, re-treat soil and re-test.

3.3 PROTECTION OF FINISHED WORK

A. Section 01700 - Execution Requirements: Protecting finished Work.

B. Do not permit soil grading over treated work.

3.4 SCHEDULES

A. Locations:
   1. Under Slabs-on-Grade.
   2. Both Sides of Foundation Surface.

END OF SECTION

DIVISION 3

CONCRETE

SECTION 03300

CAST-IN-PLACE CONCRETE

PART 1 - GENERAL

1.1 RELATED DOCUMENTS:

A. Drawings and general provisions of the Contract, including General and Supplementary Conditions and Division 1 Specification Sections, apply to this Section.

1.2 SUMMARY:

A. This Section specifies cast-in place concrete, including formwork, reinforcement, concrete materials, mix design, placement procedures, and finishes.

B. Related Sections include the following:
1. Division 2 Section “Cement Concrete Pavements” for concrete pavement and walks.

1.3 DEFINITIONS:

A. Cementitious Materials: Portland cement alone or in combination with one or more of blended hydraulic cement, fly ash and other pozzolans, ground granulated blast- furnace slag, and silica fume.

1.4 SUBMITTALS:

A. Product Data: For each type of manufactured material and product indicated.

B. Design Mixes: For each concrete mix. Include alternate mix designs when characteristics of materials, project conditions, weather, test results, or other circumstances warrant adjustments.
1. Indicate amounts of mix water to be withheld for later addition at Project site.

C. Steel Reinforcement Shop Drawings: Details of fabrication, bending, and placement, prepared according to ACI 315, "Details and Detailing of Concrete Reinforcement." Include material, grade, bar schedules, stirrup spacing, bent bar diagrams, arrangement, and supports of concrete reinforcement. Include special reinforcement required for openings through concrete structures.

D. Material Certificates: Signed by manufacturers certifying that each of the following items complies with requirements:
1. Cementitious materials and aggregates.
2. Steel reinforcement and reinforcement accessories.
3. Admixtures.
4. Curing materials.
5. Bonding agents.
6. Adhesives.
7. Repair materials.

1.5 QUALITY ASSURANCE:

A. Installer Qualifications: An experienced installer who has completed concrete Work similar in material, design, and extent to that indicated for this Project and whose work has resulted in construction with a record of successful in-service performance.

B. Professional Engineer Qualifications: A professional engineer who is legally qualified to practice in jurisdiction where project is located and who is experienced in providing engineering services of the kind indicated.

C. Manufacturer Qualifications: A firm experienced in manufacturing ready-mixed concrete products complying with ASTM C 94 requirements for production facilities and equipment.
   1. Manufacturer must be certified according to the National Ready Mixed Concrete Association's Certification of Ready Mixed Concrete Production Facilities.

D. Testing Agency Qualifications: An independent testing agency, acceptable to authorities having jurisdiction, qualified according to ASTM C 1077 and ASTM E 329 to conduct the testing indicated, as documented according to ASTM E 548.
   1. Personnel conducting field tests shall be qualified as ACI Concrete Field Testing Technician, Grade 1, according to ACI CP-1 or an equivalent certification program.

E. Source Limitations: Obtain each type or class of cementitious material of the same brand from the same manufacturer's plant, each aggregate from one source, and each admixture from the same manufacturer.

F. ACI Publications: Comply with the following, unless more stringent provisions are indicated:
   1. ACI 301, "Specification for Structural Concrete."
   2. ACI 117, "Specifications for Tolerances for Concrete Construction and Materials."

1.6 DELIVERY, STORAGE, AND HANDLING:

A. Deliver, store, and handle steel reinforcement to prevent bending and damage.

PART 2 - PRODUCTS

2.1 FORM-FACING MATERIALS:

A. Smooth-Formed Finished Concrete: Form-facing panels that will provide continuous, true, and smooth concrete surfaces. Furnish in largest practicable sizes to minimize number of joints.
   1. Plywood, metal, or other approved panel materials.
   2. Exterior-grade plywood panels, suitable for concrete forms, complying with DOC PS 1, and as follows:
      a. B-B (Concrete Form), Class 1, or better, mill oiled and edge sealed.

B. Rough-Formed Finished Concrete: Plywood, lumber, metal, or another approved material. Provide lumber dressed on at least two edges and one side for tight fit.

C. Forms for Cylindrical Columns, Pedestals, and Supports: Metal, glass-fiber-reinforced plastic, paper, or fiber tubes that will produce surfaces with gradual or abrupt irregularities not exceeding specified formwork surface class. Provide units with sufficient wall thickness to resist plastic concrete loads without detrimental deformation.

D. Chamfer Strips: Wood, metal, PVC, or rubber strips, 3/4 by 3/4 inch (19 by 19 mm), minimum.

E. Form-Release Agent: Commercially formulated form-release agent that will not bond with, stain, or adversely affect concrete surfaces and will not impair subsequent treatments of concrete surfaces.
   1. Formulate form-release agent with rust inhibitor for steel form-facing materials.

2.2 STEEL REINFORCEMENT:

A. Reinforcing Bars: ASTM A 615/A 615M, Grade 60 (Grade 420), deformed.

B. Plain-Steel Welded Wire Fabric: ASTM A 185, fabricated from as-drawn steel wire into flat sheets.

2.3 REINFORCEMENT ACCESSORIES:

A. Bar Supports: Bolsters, chairs, spacers, and other devices for spacing, supporting, and fastening reinforcing bars and welded wire fabric in place. Manufacture bar supports according to CRSI's "Manual of Standard Practice" from steel wire, plastic, or precast concrete or fiber-reinforced concrete of greater compressive strength than concrete, and as follows:
   1. For concrete surfaces exposed to view where legs of wire bar supports contact forms, use CRSI Class 1 plastic-protected or CRSI Class 2 stainless-steel bar supports.

2.4 CONCRETE MATERIALS:

A. Portland Cement: ASTM C 150, Type I/II.
   1. Fly Ash: ASTM C 618, Class C or F.

B. Normal-Weight Aggregate: ASTM C 33, uniformly graded, and as follows:
   1. Nominal Maximum Aggregate Size: 3/4 inch (19 mm) @ elevated floors.

C. Water: Potable and complying with ASTM C 94.

2.5 ADMIXTURES:

A. General: Admixtures certified by manufacturer to contain not more than 0.1 percent water-soluble chloride ions by mass of cementitious material and to be compatible with other admixtures and cementitious materials. Do not use admixtures containing calcium chloride.

B. Air-Entraining Admixture: ASTM C 260.

C. Water-Reducing Admixture: ASTM C 494, Type A.

D. High-Range, Water-Reducing Admixture: ASTM C 494, Type F.

E. Water-Reducing and Accelerating Admixture: ASTM C 494, Type E.

F. Water-Reducing and Retarding Admixture: ASTM C 494, Type D.

2.6 VAPOR RETARDERS:

A. Vapor Retarder: ASTM E 1745, Class C, of one of the following materials; or polyethylene sheet, ASTM D 4397, not less than 8 mils (0.25 mm) thick:
   1. Nonwoven, polyester-reinforced, polyethylene coated sheet 10 mils (0.25 mm); thick.
   2. Three-ply, nylon- or polyester-cord-reinforced, laminated, high-density polyethylene sheet; 7.8 mils (0.18 mm) thick.

2.7 CURING MATERIALS:

A. Absorptive Cover: AASHTO M 182, Class 2, burlap cloth made from jute or kenaf, weighing approximately 9 oz./sq. yd. (305 g/sq. m) dry.

B. Moisture-Retaining Cover: ASTM C 171, polyethylene film or white burlap-polyethylene sheet.

C. Water: Potable.

D. Clear, Waterborne, Membrane-Forming Curing Compound: ASTM C 309, Type 1, Class B.

E. Clear, Waterborne, Membrane-Forming Curing and Sealing Compound: ASTM C 1315, Type 1, Class A.

F. Available Products: Subject to compliance with requirements, products that may be incorporated into the Work include, but are not limited to, the following:

G. Products: Subject to compliance with requirements, provide one of the following:
   1. Clear, Waterborne, Membrane-Forming Curing Compound:
      a. AH Clear Cure WB; Anti-Hydro International, Inc.
      b. Spartan Cote WB; Burke Group, LLC (The).
      c. Safe-Cure & Seal 20; ChemMasters.
      d. High Seal; Conspec Marketing & Manufacturing Co., Inc.
      e. Safe Cure and Seal; Dayton Superior Corporation.
      f. Diamond Clear VOX; Euclid Chemical Co.
      g. SureCure; Kaufman Products Inc.
      h. Glazecote Sealer-20; Lambert Corporation.
      i. Dress & Seal WB; L&M Construction Chemicals, Inc.
      j. Vocomp-20; W. R. Meadows, Inc.
      k. Metcure; Metalcrete Industries.
      l. Cure & Seal 150E; Nox-Crete Products Group, Kinsman Corporation.
      m. Kure-N-Seal WB; Sonneborn, Div. of ChemRex, Inc.
      n. Florseal W.B.; Sternson Group.

o. Cure & Seal 14 percent E; Symons Corporation.
p. Horncure 100; Tamms Industries Co., Div. of LaPorte Construction Chemicals of North America, Inc.
q. Hydro Seal; Unitex.
r. Vexcon Starseal 309; Vexcon Chemicals, Inc.

2. Clear, Waterborne, Membrane-Forming Curing and Sealing Compound:
a. Klear-Kote Cure-Sealer-Hardener, 30 percent solids; Burke Group, LLC (The).
b. Polyseal WB; ChemMasters.
c. UV Safe Seal; Lambert Corporation.
d. Lumiseal WB Plus; L&M Construction Chemicals, Inc.
e. Vocomp-30; W. R. Meadows, Inc.
f. Metcure 30; Metalcrete Industries.
g. Vexcon Starseal 1315; Vexcon Chemicals, Inc.

2.8 RELATED MATERIALS:

A. Joint-Filler Strips: ASTM D 1751, asphalt-saturated cellulosic fiber.

B. Bonding Agent: ASTM C 1059, Type II, non-redispersible, acrylic emulsion or styrene butadiene.

C. Epoxy-Bonding Adhesive: ASTM C 881, two-component epoxy resin, capable of humid curing and bonding to damp surfaces, of class and grade to suit requirements.

2.9 CONCRETE MIXES:

A. Prepare design mixes for each type and strength of concrete determined by either laboratory trial mix or field test data bases, as follows:
1. Proportion normal-weight concrete according to ACI 211.1 and ACI 301.

B. Use a qualified independent testing agency for preparing and reporting proposed mix designs for the laboratory trial mix basis.

C. Footings and Foundations: Proportion normal-weight concrete mix as follows:
1. Compressive Strength (28 Days): 3000 psi.
2. Maximum Slump: 4 inches (100 mm).
3. Maximum Water/Cement ratio = 0.51.

D. Slab-on-Grade: Proportion normal-weight concrete mix as follows:
1. Compressive Strength (28 Days): 3500 psi (20.7 MPa).
2. Maximum Slump: 8 inches after addition of superplasticizer.
3. Maximum Water/Cement ratio = 0.49.

E. Cementitious Materials: Limit percentage, by weight, of cementitious materials other than portland cement in concrete as follows:

1. Fly Ash: 20 percent.

F. Air Content: Add air-entraining admixture at manufacturer's prescribed rate to result in concrete at point of placement having an air content of 2 to 4 percent, unless otherwise

indicated.

G. Air Content: Add air-entraining admixture at manufacturer's prescribed rate to result in concrete at point of placement having an air content as follows within a tolerance of plus 1 or minus 1.5 percent, unless otherwise indicated:
   1. Air Content: 6 percent for 1-inch- (25-mm-) nominal maximum aggregate size.
   2. Air Content: 6 percent for 3/4-inch- (19-mm-) nominal maximum aggregate size.

H. Do not air entrain concrete to trowel-finished interior floors and suspended slabs. Do not allow entrapped air content to exceed 3 percent.

J. Limit water-soluble, chloride-ion content in hardened concrete to 0.15 percent by weight of cement.

K. Admixtures: Use admixtures according to manufacturer's written instructions.
   1. Use water-reducing admixture or high-range water-reducing admixture (superplasticizer) as required for placement and workability, and as indicated on drawings and schedules.
   2. Use water-reducing and retarding admixture when required by high temperatures, low humidity, or other adverse placement conditions.
   3. Use water-reducing admixture in pumped concrete, concrete for heavy-use industrial slabs and parking structure slabs, concrete required to be watertight, and concrete with a water-cementitious materials ratio below 0.50.

2.10 FABRICATING REINFORCEMENT:

A. Fabricate steel reinforcement according to CRSI's "Manual of Standard Practice."

2.11 CONCRETE MIXING:

A. Ready-Mixed Concrete: Measure, batch, mix, and deliver concrete according to ASTM C 94 and ASTM C 1116, and furnish batch ticket information.
   1. When air temperature is between 85 and 90 deg F (30 and 32 deg C), reduce mixing and delivery time from 1-1/2 hours to 75 minutes; when air temperature is above 90 deg F (32 deg C), reduce mixing and delivery time to 60 minutes.

PART 3 - EXECUTION

3.1 EMBEDDED ITEMS:

A. Place and secure anchorage devices and other embedded items required for adjoining work that is attached to or supported by cast-in-place concrete. Use Setting Drawings, templates, diagrams, instructions, and directions furnished with items to be embedded.
   1. Install anchor bolts, accurately located, to elevations required.

3.2 VAPOR RETARDERS:

A. Vapor Retarder: Place, protect, and repair vapor-retarder sheets according to ASTM E 1643 and manufacturer's written instructions.

3.3 STEEL REINFORCEMENT:

A. General: Comply with CRSI's "Manual of Standard Practice" for placing reinforcement.
   1. Do not cut or puncture vapor retarder. Repair damage and reseal vapor retarder before placing concrete.

B. Clean reinforcement of loose rust and mill scale, earth, ice, and other foreign materials.

C. Accurately position, support, and secure reinforcement against displacement. Locate and support reinforcement with bar supports to maintain minimum concrete cover. Do not tack weld crossing reinforcing bars.

D. Set wire ties with ends directed into concrete, not toward exposed concrete surfaces.

E. Install welded wire fabric in longest practicable lengths on bar supports spaced to minimize sagging. Lap edges and ends of adjoining sheets at least one mesh spacing. Offset laps of adjoining sheet widths to prevent continuous laps in either direction. Lace overlaps with wire.

3.4 JOINTS:

A. General: Construct joints true to line with faces perpendicular to surface plane of concrete.

B. Construction Joints: Install so strength and appearance of concrete are not impaired, at locations indicated or as approved by Architect.
   1. Place joints perpendicular to main reinforcement. Continue reinforcement across construction joints, unless otherwise indicated. Do not continue reinforcement through sides of strip placements of floors and slabs.
   2. Form from preformed galvanized steel, plastic keyway-section forms, or bulkhead forms with keys, unless otherwise indicated. Embed keys at least 1-1/2 inches (38 mm) into concrete.
   3. Use a bonding agent at locations where fresh concrete is placed against hardened or partially hardened concrete surfaces.

C. Contraction Joints in Slabs-on-Grade: Form weakened-plane contraction joints, sectioning concrete into areas as indicated. Construct contraction joints for a depth equal to at least one-fourth of concrete thickness, as follows:
   1. Grooved Joints: Form contraction joints after initial floating by grooving and finishing each edge of joint to a radius of 1/8 inch (3 mm). Repeat grooving of contraction joints after applying surface finishes. Eliminate groover tool marks on concrete surfaces.
   2. Sawed Joints: Form contraction joints with power saws equipped with shatterproof abrasive or diamond-rimmed blades. Cut 1/8-inch- (3-mm-) wide joints into concrete when cutting action will not tear, abrade, or otherwise damage surface and before concrete develops random contraction cracks.

D. Isolation Joints in Slabs-on-Grade: After removing formwork, install joint-filler strips at slab junctions with vertical surfaces, such as column pedestals, foundation walls, grade beams, and other locations, as indicated.
   1. Extend joint-filler strips full width and depth of joint, terminating flush with finished concrete surface, unless otherwise indicated.

2. Terminate full-width joint-filler strips not less than 1/2 inch (12 mm) or more than 1 inch (25 mm) below finished concrete surface where joint sealants, specified in Division 7 Section "Joint Sealants," are indicated.
3. Install joint-filler strips in lengths as long as practicable. Where more than one length is required, lace or clip sections together.

3.5 CONCRETE PLACEMENT:

A. Before placing concrete, verify that installation of formwork, reinforcement, and embedded items is complete and that required inspections have been performed.

B. Do not add water to concrete during delivery, at Project site, or during placement, unless approved by Architect.

C. Deposit concrete continuously or in layers of such thickness that no new concrete will be placed on concrete that has hardened enough to cause seams or planes of weakness. If a section cannot be placed continuously, provide construction joints as specified. Deposit concrete to avoid segregation.

D. Deposit concrete in forms in horizontal layers no deeper than 24 inches (600 mm) and in a manner to avoid inclined construction joints. Place each layer while preceding layer is still plastic, to avoid cold joints.
1. Consolidate placed concrete with mechanical vibrating equipment. Use equipment and procedures for consolidating concrete recommended by ACI 309R.
2. Do not use vibrators to transport concrete inside forms. Insert and withdraw vibrators vertically at uniformly spaced locations no farther than the visible effectiveness of the vibrator. Place vibrators to rapidly penetrate placed layer and at least 6 inches (150 mm) into preceding layer.
3. Do not insert vibrators into lower layers of concrete that have begun to lose plasticity. At each insertion, limit duration of vibration to time necessary to consolidate concrete and complete embedment of reinforcement and other embedded items without causing mix constituents to segregate.

E. Deposit and consolidate concrete for floors and slabs in a continuous operation, within limits of construction joints, until placement of a panel or section is complete.
1. Consolidate concrete during placement operations so concrete is thoroughly worked around reinforcement and other embedded items and into corners.
2. Maintain reinforcement in position on chairs during concrete placement.
3. Screed slab surfaces with a straightedge and strike off to correct elevations.
4. Slope surfaces uniformly to drains where required.
5. Begin initial floating using bull floats or darbies to form a uniform and open-textured surface plane, free of humps or hollows, before excess moisture or bleedwater appears on the surface.
6. Do not further disturb slab surfaces before starting finishing operations.

F. Cold-Weather Placement: Comply with ACI 306.1 and as follows. Protect concrete work from physical damage or reduced strength that could be caused by frost, freezing actions, or low temperatures.
1. When air temperature has fallen to or is expected to fall below 40 deg F (4.4 deg C), uniformly heat water and aggregates before mixing to obtain a concrete

mixture temperature of not less than 50 deg F (10 deg C) and not more than 80 deg F (27 deg C) at point of placement.

2. Do not use frozen materials or materials containing ice or snow. Do not place concrete on frozen subgrade or on subgrade containing frozen materials.
3. Do not use calcium chloride, salt, or other materials containing antifreeze agents or chemical accelerators, unless otherwise specified and approved in mix designs.

G. Hot-Weather Placement: Place concrete according to recommendations in ACI 305R and as follows, when hot-weather conditions exist:

1. Cool ingredients before mixing to maintain concrete temperature below 90 deg F (32 deg C) at time of placement. Chilled mixing water or chopped ice may be used to control temperature, provided water equivalent of ice is calculated to total amount of mixing water. Using liquid nitrogen to cool concrete is Contractor's option.
2. Cover steel reinforcement with water-soaked burlap so steel temperature will not exceed ambient air temperature immediately before embedding in concrete.
3. Fog-spray forms, steel reinforcement, and subgrade just before placing concrete. Keep subgrade moisture uniform without standing water, soft spots, or dry areas.

3.6 FINISHING FLOORS AND SLABS:

A. General: Comply with recommendations in ACI 302.1R for screeding, restraightening, and finishing operations for concrete surfaces. Do not wet concrete surfaces.

B. Scratch Finish: While still plastic, texture concrete surface that has been screeded and bull-floated or darbied. Use stiff brushes, brooms, or rakes.

1. Apply scratch finish to surfaces indicated and to surfaces to receive concrete floor topping or mortar setting beds for ceramic or quarry tile, portland cement terrazzo, and other bonded cementitious floor finishes.

C. Float Finish: Consolidate surface with power-driven floats or by hand floating if area is small or inaccessible to power driven floats. Restraighten, cut down high spots, and fill low spots. Repeat float passes and restraightening until surface is left with a uniform, smooth, granular texture.

1. Apply float finish to surfaces indicated, to surfaces to receive trowel finish, and to floor and slab surfaces to be covered with fluid-applied or sheet waterproofing, built-up or membrane roofing, or sand-bed terrazzo.

D. Trowel Finish: After applying float finish, apply first trowel finish and consolidate concrete by hand or power-driven trowel. Continue troweling passes and restraighten until surface is free of trowel marks and uniform in texture and appearance. Grind smooth any surface defects that would telegraph through applied coatings or floor coverings.

1. Apply a trowel finish to surfaces indicated and to floor and slab surfaces exposed to view or to be covered with resilient flooring, carpet, ceramic or quarry tile set over a cleavage membrane, paint, or another thin film-finish coating system.
2. Finish and measure surface so gap at any point between concrete surface and an unleveled freestanding 10-foot- (3.05-m-) long straightedge, resting on two high spots and placed anywhere on the surface, does not exceed the following: 3/16 inch (4.8 mm).

E. Trowel and Fine-Broom Finish: Apply a partial trowel finish, stopping after second troweling, to surfaces indicated and to surfaces where ceramic or quarry tile is to be installed by either thickset or thin-set method. Immediately after second troweling, and when concrete is still plastic, slightly scarify surface with a fine broom.

F. Broom Finish: Apply a broom finish to exterior concrete platforms, steps, and ramps, and elsewhere as indicated.
   1. Immediately after float finishing, slightly roughen trafficked surface by brooming with fiber-bristle broom perpendicular to main traffic route. Coordinate required final finish with Architect before application.

3.7 MISCELLANEOUS CONCRETE ITEMS:

A. Filling In: Fill in holes and openings left in concrete structures, unless otherwise indicated, after work of other trades is in place. Mix, place, and cure concrete, as specified, to blend with in-place construction. Provide other miscellaneous concrete filling indicated or required to complete Work.

B. Curbs: Provide monolithic finish to interior curbs by stripping forms while concrete is still green and by steel-troweling surfaces to a hard, dense finish with corners, intersections, and terminations slightly rounded.

C. Equipment Bases and Foundations: Provide machine and equipment bases and foundations as shown on Drawings. Set anchor bolts for machines and equipment at correct elevations, complying with diagrams or templates of manufacturer furnishing machines and equipment.

D. Steel Pan Stairs: Provide concrete fill for steel pan stair treads, landings, and associated items. Cast-in-inserts and accessories as shown on the drawings. Screed, tamp, and trowel finish concrete surfaces unless noted otherwise.

3.8 CONCRETE PROTECTION AND CURING:

A. General: Protect freshly placed concrete from premature drying and excessive cold or hot temperatures. Comply with ACI 306.1 for cold-weather protection and with recommendations in ACI 305R for hot-weather protection during curing.

B. Formed Surfaces: Cure formed concrete surfaces, including underside of beams, supported slabs, and other similar surfaces. If forms remain during curing period, moist cure after loosening forms. If removing forms before end of curing period, continue curing by one or a combination of the following methods:

C. Unformed Surfaces: Begin curing immediately after finishing concrete. Cure unformed surfaces, including floors and slabs, concrete floor toppings, and other surfaces, by one or a combination of the following methods:
   1. Moisture Curing: Keep surfaces continuously moist for not less than seven days with the following materials:
      a. Water.
      b. Continuous water-fog spray.
      c. Absorptive cover, water saturated, and kept continuously wet. Cover concrete surfaces and edges with 12-inch (300-mm) lap over adjacent

absorptive covers.

2. Moisture-Retaining-Cover Curing: Cover concrete surfaces with moisture-retaining cover for curing concrete, placed in widest practicable width, with sides and ends lapped at least 12 inches (300 mm), and sealed by waterproof tape or adhesive. Cure for not less than seven days. Immediately repair any holes or tears during curing period using cover material and waterproof tape.
   a. Moisture cure or use moisture-retaining covers to cure concrete surfaces to receive floor coverings.
   b. Moisture cure or use moisture-retaining covers to cure concrete surfaces to receive penetrating liquid floor treatments.
   c. Cure concrete surfaces to receive floor coverings with either a moisture-retaining cover or a curing compound that the manufacturer recommends for use with floor coverings.
3. Curing Compound: Apply uniformly in continuous operation by power spray or roller according to manufacturer's written instructions. Recoat areas subjected to heavy rainfall within three hours after initial application. Maintain continuity of coating and repair damage during curing period.

3.9 CONCRETE SURFACE REPAIRS:

A. Defective Concrete: Repair and patch defective areas when approved by Architect. Remove and replace concrete that cannot be repaired and patched to Architect's approval.

B. Patching Mortar: Mix dry-pack patching mortar, consisting of one part portland cement to two and one-half parts fine aggregate passing a No. 16 (1.2-mm) sieve, using only enough water for handling and placing.

C. Repairing Formed Surfaces: Surface defects include color and texture irregularities, cracks, spalls, air bubbles, honeycombs, rock pockets, fins and other projections on the surface, and stains and other discolorations that cannot be removed by cleaning.
   1. Immediately after form removal, cut out honeycombs, rock pockets, and voids more than 1/2 inch (13 mm) in any dimension in solid concrete but not less than 1 inch (25 mm) in depth. Make edges of cuts perpendicular to concrete surface. Clean, dampen with water, and brush-coat holes and voids with bonding agent. Fill and compact with patching mortar before bonding agent has dried. Fill form-tie voids with patching mortar or cone plugs secured in place with bonding agent.
   2. Repair defects on surfaces exposed to view by blending white portland cement and standard portland cement so that, when dry, patching mortar will match surrounding color. Patch a test area at inconspicuous locations to verify mixture and color match before proceeding with patching. Compact mortar in place and strike off slightly higher than surrounding surface.
   3. Repair defects on concealed formed surfaces that affect concrete's durability and structural performance as determined by Architect.

D. Repairing Unformed Surfaces: Test unformed surfaces, such as floors and slabs, for finish and verify surface tolerances specified for each surface. Correct low and high areas. Test surfaces sloped to drain for trueness of slope and smoothness; use a sloped template.
   1. Repair finished surfaces containing defects. Surface defects include spalls, popouts, honeycombs, rock pockets, crazing and cracks in excess of 0.01 inch (0.25 mm) wide or that penetrate to reinforcement or completely through

unreinforced sections regardless of width, and other objectionable conditions.

2. After concrete has cured at least 14 days, correct high areas by grinding.
3. Correct localized low areas during or immediately after completing surface finishing operations by cutting out low areas and replacing with patching mortar. Finish repaired areas to blend into adjacent concrete.
4. Correct other low areas scheduled to receive floor coverings with a repair underlayment. Prepare, mix, and apply repair underlayment and primer according to manufacturer's written instructions to produce a smooth, uniform, plane, and level surface. Feather edges to match adjacent floor elevations.
5. Correct other low areas scheduled to remain exposed with a repair topping. Cut out low areas to ensure a minimum repair topping depth of 1/4 inch (6 mm) to match adjacent floor elevations. Prepare, mix, and apply repair topping and primer according to manufacturer's written instructions to produce a smooth, uniform, plane, and level surface.
6. Repair defective areas, except random cracks and single holes 1 inch (25 mm) or less in diameter, by cutting out and replacing with fresh concrete. Remove defective areas with clean, square cuts and expose steel reinforcement with at least 3/4 inch (19 mm) clearance all around. Dampen concrete surfaces in contact with patching concrete and apply bonding agent. Mix patching concrete of same materials and mix as original concrete except without coarse aggregate. Place, compact, and finish to blend with adjacent finished concrete. Cure in same manner as adjacent concrete.
7. Repair random cracks and single holes 1 inch (25 mm) or less in diameter with patching mortar. Groove top of cracks and cut out holes to sound concrete and clean off dust, dirt, and loose particles. Dampen cleaned concrete surfaces and apply bonding agent. Place patching mortar before bonding agent has dried. Compact patching mortar and finish to match adjacent concrete. Keep patched area continuously moist for at least 72 hours.

E. Perform structural repairs of concrete, subject to Architect's approval, using epoxy adhesive and patching mortar.

F. Repair materials and installation not specified above may be used, subject to Architect's approval.

3.10 FIELD QUALITY CONTROL:

A. Testing Agency: Owner will engage a qualified independent testing and inspecting agency to sample materials, perform tests, and submit test reports during concrete placement. Sampling and testing for quality control may include those specified in this Article.

B. Testing Services: Testing of composite samples of fresh concrete obtained according to ASTM C 172 shall be performed according to the following requirements:

1. Testing Frequency: Obtain one composite sample for each day's pour of each concrete mix exceeding 5 cu. yd. (4 cu. m), but less than 25 cu. yd. (19 cu. m), plus one set for each additional 50 cu. yd. (38 cu. m) or fraction thereof.
    a. When frequency of testing will provide fewer than five compressive-strength tests for each concrete mix, testing shall be conducted from at least five randomly selected batches or from each batch if fewer than five are used.

2. Slump: ASTM C 143; one test at point of placement for each composite sample, but not less than one test for each day's pour of each concrete mix. Perform additional tests when concrete consistency appears to change.
3. Air Content: ASTM C 231, pressure method, for normal-weight concrete; ASTM C 173, volumetric method, for structural lightweight concrete; one test for each composite sample, but not less than one test for each day's pour of each concrete mix.
4. Compression Test Specimens: ASTM C 31/C 31M; cast and laboratory cure one set of four standard cylinder specimens for each composite sample.
    a. Cast and field cure one set of four standard cylinder specimens for each composite sample.
5. Compressive-Strength Tests: ASTM C 39; test two laboratory-cured specimens at 7 days and two at 28 days.
    a. Test two field-cured specimens at 7 days and two at 28 days.
    b. A compressive-strength test shall be the average compressive strength from two specimens obtained from same composite sample and tested at age indicated.

C. When strength of field-cured cylinders is less than 85 percent of companion laboratory-cured cylinders, Contractor shall evaluate operations and provide corrective procedures for protecting and curing in-place concrete.

D. Strength of each concrete mix will be satisfactory if every average of any three consecutive compressive-strength tests equals or exceeds specified compressive strength and no compressive-strength test value falls below specified compressive strength by more than 500 psi (3.4 MPa).

E. Test results shall be reported in writing to Architect, concrete manufacturer, and Contractor within 48 hours of testing. Reports of compressive-strength tests shall contain Project identification name and number, date of concrete placement, name of concrete testing and inspecting agency, location of concrete batch in Work, design compressive strength at 28 days, concrete mix proportions and materials, compressive breaking strength, and type of break for both 7-and 28-day tests.

F. Nondestructive Testing: Impact hammer, sonoscope, or other nondestructive device may be permitted by Architect but will not be used as sole basis for approval or rejection of concrete.

G. Additional Tests: Testing and inspecting agency shall make additional tests of concrete when test results indicate that slump, air entrainment, compressive strengths, or other requirements have not been met, as directed by Architect. Testing and inspecting agency may conduct tests to determine adequacy of concrete by cored cylinders complying with ASTM C 42 or by other methods as directed by Architect.

END OF SECTION

DIVISION 4

MASONRY

SECTION 04065

MASONRY MORTAR AND GROUT

PART 1 GENERAL

1.1 SUMMARY

A. Section includes mortar and grout for masonry.

B. Related Sections:
   1. Section 04810 - Unit Masonry Assemblies: Installation of mortar and grout.

1.2 REFERENCES

A. ASTM International:
   1. ASTM C91 - Standard Specification for Masonry Cement.
   2. ASTM C143/C143M - Standard Test Method for Slump of Hydraulic Cement Concrete.
   3. ASTM C144 - Standard Specification for Aggregate for Masonry Mortar.
   4. ASTM C150 - Standard Specification for Portland Cement.
   5. ASTM C207 - Standard Specification for Hydrated Lime for Masonry Purposes.
   6. ASTM C270 - Standard Specification for Mortar for Unit Masonry.
   7. ASTM C387 - Standard Specification for Packaged, Dry, Combined Materials for Mortar and Concrete.
   8. ASTM C404 - Standard Specification for Aggregates for Masonry Grout.
   9. ASTM C780 - Standard Test Method for Preconstruction and Construction Evaluation of Mortars for Plain and Reinforced Unit Masonry.
   10. ASTM C1019 - Standard Test Method for Sampling and Testing Grout.
   11. ASTM C1142 - Standard Specification for Extended Life Mortar for Unit Masonry.
   12. ASTM C1329 - Standard Specification for Mortar Cement.
   13. ASTM C1357 - Standard Test Method for Evaluating Masonry Bond Strength.

B. The Masonry Society:
   1. TMS MSJC - Building Code for Masonry Structures (ACI 530/ASCE 5/TMS 402), Specification for Masonry Structures (ACI 530.1/ASCE 6/TMS 602) and Commentaries.

1.3 SUBMITTALS

A. Section 01330 - Submittal Procedures: Submittal requirements.

B. Samples: Submit two samples of mortar, illustrating mortar color and color range.

C. Design Data: Submit design mix when Property specification of ASTM C270 is to be used, required environmental conditions, and admixture limitations.

D. Test Reports:
   1. Submit reports on mortar indicating conformance of component mortar materials to requirements of ASTM C270 and test and evaluation reports to ASTM C780 for aggregate ratio and water content, air content, consistency and compressive strength.
   2. Submit reports on grout indicating conformance of component grout materials to requirements of ASTM C476 and test and evaluation reports to ASTM C1019.

E. Manufacturer's Installation Instructions: Submit premix mortar manufacturer's installation instructions.

F. Manufacturer's Certificate: Certify products meet or exceed specified requirements.

1.4 QUALITY ASSURANCE

A. Perform Work in accordance with TMS MSJC Code and TMS MSJC Specification.

B. Maintain one copy of each document on site.

1.5 ENVIRONMENTAL REQUIREMENTS

A. Section 01600 - Product Requirements.

B. Hot and Cold Weather Requirements: TMS MSJC Specification.

1.6 MOCKUPS

A. Section 01400 - Quality Requirements: Requirements for mockups.

B. Size: Construct 4' x 4' masonry wall mockup, including brick, mortar and cast stone.

PART 2 PRODUCTS

2.1 MORTAR AND MASONRY GROUT

A. Manufacturers:
   1. Blue Circle Cement
   2. Citadel Cement
   3. The Quikrete Companies
   4. Mortamix
   5. Substitutions: Section 01600 - Product Requirements

2.2 COMPONENTS

A. Portland Cement: ASTM C150, Type I, gray color.

B. Mortar Aggregate: ASTM C144, standard masonry type.

C. Hydrated Lime: ASTM C207, Type N.

D. Grout Aggregate: ASTM C404, fine.

E. Water: Clean and potable.

F. Mortar Color: Mineral oxide pigment; color as selected.

G. Calcium chloride is not permitted.

2.3 MIXES

A. Mortar Mixes:
1. Mortar For Non-Structural Masonry: ASTM C270, Type N using property specification.
2. Pointing Mortar: ASTM C270, Type N using property specification.
3. Stain Resistant Pointing Mortar: One part Portland cement, 1/8 part hydrated lime, and two parts graded (80 mesh) aggregate, proportioned by volume. Add aluminum tristearate, calcium stearate, or ammonium stearate equal to 2 percent of Portland cement by weight.

B. Mortar Mixing:
1. Thoroughly mix mortar ingredients in accordance with ASTM C270 in quantities needed for immediate use.
2. Achieve uniformly damp sand immediately before mixing process.
3. Add mortar color to achieve uniformity of mix and coloration.
4. Re-temper only within two hours of mixing.

C. Grout Mixes:
1. Grout for Structural Masonry: 2,000 psi strength at 28 days; 8-11 inches slump; mixed in accordance with ASTM C476 Fine grout.
2. Application:
   a. Coarse Grout: For grouting spaces with minimum 4 inches dimension in every direction.
   b. Fine Grout: For grouting other spaces.

D. Grout Mixing:
1. Mix grout in accordance with ASTM C94, modified to use ingredients complying with ASTM C476.
2. Add admixtures; mix uniformly.

PART 3 EXECUTION

3.1 EXAMINATION

A. Section 01300 - Administrative Requirements: Coordination and project conditions.

B. Request inspection of spaces to be grouted.

3.2 INSTALLATION

A. Install mortar and grout in accordance with TMS MSJC Specification.

3.3 FIELD QUALITY CONTROL

A. Section 01400 - Quality Requirements: Testing and Inspection Services

B. Establishing Mortar Mix: In accordance with ASTM C270.

C. Testing of Grout Mix: In accordance with ASTM C1019 for compressive strength and in accordance with ASTM C143/C143M for slump.

D. Test flexural bond strength of mortar and masonry units to ASTM C1357; test in conjunction with masonry unit sections specified.

E. Test compressive strength of mortar and masonry to ASTM C1314; test in accordance with masonry unit sections specified.

3.4 SCHEDULES

A. Exterior Brick Veneer Walls: Type N Mortar.
   1. Color: As selected by Architect.

B. CMU Walls: Type "S"
   1. Color: Gray

END OF SECTION

SECTION 04720

CAST STONE MASONRY

PART 1 - GENERAL

1.1 SUMMARY

A. Section Includes:
1. Cast stone cap.
2. Anchors and supports.
3. Accessories.

B. Related Requirements:

1. Section 03300 - Cast-In-Place Concrete: Backup for cast stone veneer.
2. Section 04065 - Masonry Mortaring and Grouting: Mortar for setting cast stone units.
3. Section 07900 - Joint Protection: Rod and sealant at control and expansion joints.

1.2 REFERENCE STANDARDS

A. American Concrete Institute:
1. ACI 530/530.1 - Building Code Requirements and Specification for Masonry Structures and Related Commentaries.

B. ASTM International:
1. ASTM A36 - Standard Specification for Carbon Structural Steel.
2. ASTM A36M - Standard Specification for Carbon Structural Steel.
3. ASTM A153 - Standard Specification for Zinc Coating (Hot-Dip) on Iron and Steel Hardware.
4. ASTM A153M - Standard Specification for Zinc Coating (Hot-Dip) on Iron and Steel Hardware.
5. ASTM A185 - Standard Specification for Steel Welded Wire Reinforcement, Plain, for Concrete.
6. ASTM A185M - Standard Specification for Steel Welded Wire Reinforcement, Plain, for Concrete.
7. ASTM A615 - Standard Specification for Deformed and Plain Carbon-Steel Bars for Concrete Reinforcement.
8. ASTM A615M - Standard Specification for Deformed and Plain Carbon-Steel Bars for Concrete Reinforcement.
9. ASTM A653 - Standard Specification for Steel Sheet, Zinc-Coated (Galvanized) or Zinc-Iron Alloy-Coated (Galvannealed) by the Hot-Dip Process.
10. ASTM A653M - Standard Specification for Steel Sheet, Zinc-Coated (Galvanized) or Zinc-Iron Alloy-Coated (Galvannealed) by the Hot-Dip Process.
11. ASTM A666 - Standard Specification for Annealed or Cold-Worked Austenitic Stainless Steel Sheet, Strip, Plate, and Flat Bar.
12. ASTM B370 - Standard Specification for Copper Sheet and Strip for Building Construction.

13. ASTM C33 - Standard Specification for Concrete Aggregates.
14. ASTM C33M - Standard Specification for Concrete Aggregates.
15. ASTM C150 - Standard Specification for Portland Cement.
16. ASTM C150M - Standard Specification for Portland Cement.
17. ASTM C260 - Standard Specification for Air-Entraining Admixtures for Concrete.
18. ASTM C260M - Standard Specification for Air-Entraining Admixtures for Concrete.
19. ASTM C426 - Standard Test Method for Linear Drying Shrinkage of Concrete Masonry Units.
20. ASTM C494 - Standard Specification for Chemical Admixtures for Concrete.
21. ASTM C494M - Standard Specification for Chemical Admixtures for Concrete.
22. ASTM C595 - Standard Specification for Blended Hydraulic Cements.
23. ASTM C595M - Standard Specification for Blended Hydraulic Cements.
24. ASTM C618 - Standard Specification for Coal Fly Ash and Raw or Calcined Natural Pozzolan for Use in Concrete.
25. ASTM C666 - Standard Test Method for Resistance of Concrete to Rapid Freezing and Thawing.
26. ASTM C666M - Standard Test Method for Resistance of Concrete to Rapid Freezing and Thawing.
27. ASTM C979 - Standard Specification for Pigments for Integrally Colored Concrete.
28. ASTM C979M - Standard Specification for Pigments for Integrally Colored Concrete.
29. ASTM C989 - Standard Specification for Slag Cement for Use in Concrete and Mortars.
30. ASTM C989M - Standard Specification for Slag Cement for Use in Concrete and Mortars.
31. ASTM C1116 - Standard Specification for Fiber-Reinforced Concrete.
32. ASTM C1116M - Standard Specification for Fiber-Reinforced Concrete.
33. ASTM C1157 - Standard Performance Specification for Hydraulic Cement.
34. ASTM C1157M - Standard Performance Specification for Hydraulic Cement.
35. ASTM C1194 - Standard Test Method for Compressive Strength of Architectural Cast Stone.
36. ASTM C1195 - Standard Test Method for Absorption of Architectural Cast Stone.
37. ASTM C1364 - Standard Specification for Architectural Cast Stone.
38. ASTM D1729 - Standard Practice for Visual Appraisal of Colors and Color Differences of Diffusely-Illuminated Opaque Materials.
39. ASTM D2244 - Standard Practice for Calculation of Color Tolerances and Color Differences from Instrumentally Measured Color Coordinates.

C. Cast Stone Institute:
   1. Technical Manual.

1.3 COORDINATION

A. Section 01300 - Administrative Requirements: Requirements for coordination.

B. Coordinate Work of this Section with metal-framed backup.

1.4 PREINSTALLATION MEETINGS

A. Section 01300 - Administrative Requirements: Requirements for preinstallation meeting.

B. Convene minimum one week prior to commencing Work of this Section.

1.5 SUBMITTALS

A. Section 01330 - Submittal Procedures: Requirements for submittals.

B. Product Data: Submit data for cast stone units, wall ties , anchors and other accessories.

C. Shop Drawings:
   1. Indicate cast stone layout, profiles, cross sections, reinforcement, exposed faces, joint arrangement, anchoring methods, and anchors.
   2. Indicate cast stone types and locations.

D. Samples:
   1. Submit two of each cast stone item, 12 by 12 inches in size, illustrating profiles, finish, texture, and color range.
   2. Submit two of each anchor, illustrating material, configuration, and finish.

E. Manufacturer's Certificate: Certify that products meet or exceed specified requirements.

F. Test and Evaluation Reports: Indicate concrete mix design compressive strength and water absorption.

G. Manufacturer's Instructions: Submit instructions for anchor attachment, cast stone cleaning, and special Project installation conditions.

H. Source Quality-Control Submittals: Indicate results of factory tests and inspections.

I. Qualifications Statements:
   1. Submit qualifications for manufacturer and installer.

1.6 MAINTENANCE MATERIAL SUBMITTALS

A. Section 01700 - Execution and Closeout Requirements: Requirements for maintenance materials.

B. Extra Stock Materials:
   1. Furnish two of each type of cast stone caps.

1.7 QUALITY ASSURANCE

A. Perform Work according to ACI 530/530.1 and according to Cast Stone Institute Technical Manual.

1.8 QUALIFICATIONS

A. Manufacturer: Company specializing in manufacturing products specified in this Section with minimum three years' experience.
   1. Manufacturing plant certified by the Cast Stone Institute.

B. Installer: Company specializing in performing Work of this Section with minimum three years' experience and approved by manufacturer.

1.9 MOCKUPS

A. Section 01400 - Quality Requirements: Requirements for mockups.

B. Size: Provide full-sized mockup, to be incorporated into mockup wall as specified in Section 042000 - Unit Masonry. Mok-up to include inscribed letters.

C. Locate where directed by Architect.

D. Remove mockup when directed by Architect/Engineer.

1.10 DELIVERY, STORAGE, AND HANDLING

A. Section 01600 - Product Requirements: Requirements for transporting, handling, storing, and protecting products.

B. Mark cast stone units with same identification marks as shown on Shop Drawings.

C. Inspection: Accept cast stone on-Site in manufacturer's protective packaging, and inspect for damage.

D. Store materials according to manufacturer's instructions.

E. Store cast stone on-Site covered and elevated above grade.

F. Protect cast stone from damage, soiling, and staining.

G. Provide ventilation to prevent condensation from forming on cast stone.

1.11 AMBIENT CONDITIONS

A. Section 01500 - Temporary Facilities and Controls: Requirements for ambient condition control facilities for product storage and installation.

B. Cold Weather Requirements: According to ACI 530/530.1, when ambient temperature or temperature of masonry units is less than 40 degrees F.

C. Hot Weather Requirements: According to ACI 530/530.1, when ambient temperature is

greater than 100 degrees F or ambient temperature is greater than 90 degrees F with wind velocity greater than 8 mph.

1.12 EXISTING CONDITIONS

A. Field Measurements:
   1. Verify field measurements prior to fabrication.
   2. Indicate field measurements on Shop Drawings.

PART 2 - PRODUCTS

2.1 CAST STONE

A. Manufacturers:
   1. Rockcast: Architectural cast stone masonry veneer.
   2. Continental Cast Stone.
   3. Substitutions: Specified in Section 01600 - Product Requirements.

B. Description:
   1. Comply with ASTM C1364.
   2. Architectural Cast Stone Units Fabrication Method: Dry casting.
   3. Finish: Fine-grained texture simulating natural cut stone.

2.2 PERFORMANCE AND DESIGN CRITERIA

A. Color and Finish: Fine grain texture and color of natural as selected.

2.3 MATERIALS

A. Portland Cement:
   1. Comply with ASTM C150, Type I - Normal.

B. Blended and Hydraulic Cement: Comply with ASTM C595 and ASTM C1157.

C. Coarse Aggregates:
   1. Comply with ASTM C33, except grading requirements.
   2. Granite, quartz, or limestone.

D. Fine Aggregates:
   1. Comply with ASTM C33, except grading requirements.
   2. Manufactured or natural sand.

E. Coloring Pigments:
   1. Comply with ASTM C979.
   2. Inorganic iron oxide.

F. Chemical Admixtures:

1. Air Entraining: Comply with ASTM C260.
2. Water Reducing, Retarding, and Accelerating: Comply with ASTM C494.

G. Fly Ash: Comply with ASTM C618.

H. Blast Furnace Slag: Comply with ASTM C989.

I. Water: Potable.

J. Welded Wire Fabric: ASTM A185.

2.4 FABRICATION

A. Thickness: nominal 4 inches.

B. Size:
1. As indicated on Drawings.
2. Edges: Ease all corners and edges.

C. Use rigid molds, constructed to maintain cast stone units uniform in shape, size, and finish.

D. Forming:
1. Form units to length required for joint layout as indicated on Drawings .
2. Field cutting to length is not permitted.

E. Reinforce units according to ASTM C1364 for safe handling, and as indicated on Shop Drawings, to resist structural loads.
1. Use galvanized-finished reinforcing, if concrete cover over reinforcing is less than 1-1/2 inches thick, including end conditions.

F. Embed anchors and other cast-in items.

G. Form external corners to square joint profile.

H. Slope exposed top surfaces of horizontal sill surfaces for natural wash.

I. Drip Slots:
1. Form drip slots in bottom surface of exterior units projecting more than 1/2 inch beyond window frame.
2. Size slots not less than 3/8 inch wide and 1/4 inch deep; full width of projection.

J. Curing: Cure units to develop concrete quality and to minimize appearance blemishes, including nonuniformity, staining, and surface cracking.

K. Acid-etch exposed-to-view surfaces to remove cement film and to achieve uniform appearance.

2.5 MIXES

A. Concrete:
   1. Compressive Strength:
      a. Comply with ASTM C1194.
      b. Minimum 6,500 psi at 28 days.
   2. Slump: As determined by manufacturer.
   3. Absorption:
      a. Comply with ASTM C1195.
      b. Maximum 6 percent for cold water and 10 percent for boiling water, at 28 days.

2.6 ACCESSORIES

A. Anchors and Supports:
   1. Material: ASTM A666 Grade, Type 316 stainless steel.
   2. Sizes and Configurations: As required for vertical and horizontal support of cast stone and resisting specified loads.

B. Mortar: As specified in Section 04065 - Masonry Mortaring and Grouting.

C. Flashings: As specified in Section 07620 - Sheet Metal Flashing and Trim.

D. Self-Adhering Flashing: .

E. Sealant:
   1. Type: , as specified in Section 07900 - Joint Protection.
   2. Color: as selected.

F. Weeps: as specified in 04200 Unit Masonry.

G. Cleaning Solution: Nonacidic detergent type and not harmful to cast stone or adjacent materials and approved by manufacturer.

PART 3 - EXECUTION

3.1 EXAMINATION

A. Section 01700 - Execution and Closeout Requirements: Requirements for installation examination.

B. Verify that field conditions are acceptable and are ready to receive Work.

C. Verify that items provided by other Sections of Work are properly sized and located.

D. Verify elevations, dimensions, and alignment of foundations and other supporting construction prior to beginning Work.

3.2 PREPARATION

A. Section 01700 - Execution and Closeout Requirements: Requirements for installation preparation.

B. Coordinate installation of anchors furnished to other Sections.

C. Provide for erection procedures and induced loads during erection.

D. Furnish temporary bracing during installation, and maintain temporary bracing in place until final support is provided.

3.3 INSTALLATION

A. Establish indicated lines, levels, and coursing, and protect from displacement.

B. Maintain cast stone courses to uniform dimension.

C. Form bed and head joints of uniform thickness.

D. Cast Stone Coursing:
1. Joint Location: As indicated on Drawings.
2. Joint Width: 3/8 inches.
3. Joint Shape: Concave.

E. Placing and Bonding:
1. Install anchors to support and position cast stone.
2. Drench cast stone units with clear running water, just prior to setting.
3. Lay cast stone units in full bed of mortar, with full head joints.
4. Leave head and top joints in units with exposed top surfaces open to receive sealant.
5. Leave joints under shelf angles open to receive sealant.
6. Fill dowel holes and anchor slots with mortar.
7. Adjustments:
   a. Do not shift or tap cast stone units after mortar has achieved initial set.
   b. If adjustment is required, remove mortar and replace.
8. Mortar Joints:
   a. Rake mortar joints 3/4 inches deep for pointing, and sponge face of each stone to remove excess mortar.
   b. Tuck-point mortar joints.
   c. Pack mortar tightly into joint.
   d. Tool joint surface to specified shape.
9. Site cutting of cast stone units is not permitted.

F. Weeps:
1. Install weeps in vertical stone joints at 24 inches o.c., horizontally.
2. Locations: Immediately above horizontal flashings, above shelf angles and supports, and at bottom of wall,.

G. Cavity Wall:
1. Do not permit mortar to drop or accumulate into cavity air space or to plug weeps.

2. Build backup masonry wythe ahead of cast stone veneer to receive cavity insulation and air/vapor-retarder adhesive.

H. Anchorage - Cast Stone:
1. Attach wall ties in CMU backing to bond veneer at maximum 16 inches o.c., vertically and horizontally.

I. Built-In Work:
1. As Work progresses, install built-in metal door frames and window frames, and other items to be built into Work and furnished by other Sections.
2. Install built-in items plumb and level.
3. Frames:
   a. Bed anchors of metal door and glazed frames in adjacent mortar joints.
   b. Fill frame voids solid with grout or mortar.
   c. Fill adjacent masonry cores with grout minimum 12 inches from framed openings.

3.4 TOLERANCES

A. Section 01400 - Quality Requirements: Requirements for tolerances.

B. Tolerances: According to Cast Stone Institute Technical Manual.

3.5 CLEANING

A. Section 01700 - Execution and Closeout Requirements: Requirements for cleaning.

B. Remove excess mortar and sealant as Work progresses.

C. Replace defective mortar.

D. Match adjacent Work.

E. Wet cast stone, and clean soiled surfaces with cleaning solution.

F. Use nonmetallic tools in cleaning operations.

3.6 PROTECTION

A. Section 01700 - Execution and Closeout Requirements: Requirements for protecting finished Work.

B. Protect cast stone from contact with mortar, soil, and other materials capable of staining or discoloring cast stone.

C. Coverings:
1. Protect tops of masonry work with waterproof coverings secured in place without damaging masonry.
2. Provide coverings where masonry is exposed to weather when Work is not in

progress.

3. Maintain protection on tops of completed exterior walls until installation of permanent waterproof cap materials.

END OF SECTION

SECTION 04810

UNIT MASONRY ASSEMBLIES

PART 1 GENERAL

1.1 SUMMARY

A. Section includes pre-faced brick, concrete masonry units; reinforcement, anchorage, and accessories.

B. Related Sections:
1. Section 04065 - Masonry Mortar and Grout: Mortar and grout.
2. Section 07620 - Sheet Metal Flashing and Trim: Product requirements for reglets for flashings for placement by this section.
3. Section 07840 - Firestopping: Firestopping at penetrations of masonry work.
4. Section 07900 - Joint Sealers: Rod and sealant at control and expansion joints.

1.2 REFERENCES

A. ASTM International:
1. ASTM A153/A153M - Zinc Coating (Hot-Dip) on Iron and Steel Hardware.
2. ASTM A580/A580M - Standard Specification for Stainless Steel Wire.
3. ASTM A615/A615M - Standard Specification for Deformed and Plain Billet-Steel Bars for Concrete Reinforcement.
4. ASTM A641/A641M - Standard Specification for Zinc-Coated (Galvanized) Carbon Steel Wire.
5. ASTM A653/A653M - Standard Specification for Steel Sheet, Zinc-Coated (Galvanized) or Zinc-Iron Alloy-Coated (Galvannealed) by the Hot-Dip Process.
6. ASTM A951 - Standard Specification for Masonry Joint Reinforcement.
7. ASTM B370 - Standard Specification for Copper Sheet and Strip for Building Construction.
8. ASTM C55 - Standard Specification for Concrete Brick.
9. ASTM C67 - Standard Test Methods for Sampling and Testing Brick and Structural Clay Tile.
10. ASTM C90 - Standard Specification for Loadbearing Concrete Masonry Units.
11. ASTM C129 - Standard Specification for Nonloadbearing Concrete Masonry Units.
12. ASTM C140 - Standard Test Methods of Sampling and Testing Concrete Masonry Units.
13. ASTM C216 - Standard Specification for Facing Brick (Solid Masonry Units Made from Clay or Shale).
14. ASTM D226 - Standard Specification for Asphalt-Saturated Organic Felt Used in Roofing and Waterproofing.

B. The Masonry Society:
1. TMS MSJC - Building Code for Masonry Structures (ACI 530/ASCE 5/TMS 402), Specification for Masonry Structures (ACI 530.1/ASCE 6/TMS 602) and Commentaries.

1.3 SUBMITTALS

A. Section 01330 - Submittal Procedures: Submittal requirements.

B. Product Data: Submit data for pre-faced bricks and fabricated wire reinforcement wall ties anchors and other accessories.

C. Samples: Submit four samples of face brick units to illustrate color, texture and extremes of color range.

D. Manufacturer's Certificate: Certify products meet or exceed specified requirements.

1.4 QUALITY ASSURANCE

A. Perform Work in accordance with TMS MSJC Code and TMS MSJC Specification.

B. Maintain one copy of each document on site.

1.5 QUALIFICATIONS

A. Installer: Company specializing in performing Work of this section with minimum three years documented experience.

1.6 MOCKUP

A. Section 01400 - Quality Requirements: Mockup requirements.

B. Construct composite cavity masonry wall mockup, 8 feet long by 6 feet high, including masonry, mortar and accessories.

C. Locate where directed by Architect.

D. Remove mockup when directed by Architect.

1.7 PRE-INSTALLATION MEETINGS

A. Section 01300 - Administrative Requirements: Pre-installation meeting.

B. Convene minimum one week prior to commencing work of this section.

1.8 DELIVERY, STORAGE, AND HANDLING

A. Section 01600 - Product Requirements: Product storage and handling requirements.

B. Accept pre-faced brick units and concrete masonry units on site. Inspect for damage.

1.9 ENVIRONMENTAL REQUIREMENTS

A. Section 01600 - Product Requirements.

B. Hot and Cold Weather Requirements: TMS MSJC Specification.

1.10 COORDINATION

A. Section 01300 - Administrative Requirements: Coordination and project conditions.

B. Coordinate masonry work with installation of window and door anchors and exterior wall framing.

1.11 EXTRA MATERIALS

A. Section 01700 - Execution Requirements: Spare parts and maintenance products.

B. Supply 50 of each size, color, and type of glazed pre-faced units.

PART 2 PRODUCTS

2.1 UNIT MASONRY ASSEMBLIES

A. Manufacturers:
   1. Brick:
      a. Allowance as specified in Section 01200.
   2. CMU:
      a. Block USA
      b. Featherlite
      c. Best Block Co.
      d. Substitutions: Under provisions of Section 01600.

2.2 COMPONENTS

A. Brick Size and Shape: Nominal size of 3-5/8 x 2-1/4 x 7-5/8 inches. Furnish special units for 90 degree corners.

B. Special Brick Shape: Shaped to profile indicated; surface texture on sides and ends.

C. Hollow Load Bearing Concrete Masonry Units (CMU): ASTM C90, Grade N, Type I - Moisture Controlled, lightweight.
   1. CMU size: Modular 8” x 8” x 16”.

D. Concrete Brick Units: ASTM C55, Grade N, Type I - Moisture Controlled lightweight of same Grade, Type, and Weight as block units.

E. Concrete Masonry Unit Size and Shape: Nominal modular size of 8 x 8 x 16 inches.

2.3 ACCESSORIES

A. Single Wythe Joint Reinforcement: Ladder type; steel wire, hot dip galvanized to ASTM A641/A641M Class 3 after fabrication, 3/16 inch side rods with 3/16 inch cross ties.

B. Multiple Wythe Joint Reinforcement: Ladder type; without moisture drip; adjustable type, steel wire, hot dip galvanized to ASTM A641/A641M Class 3 1 after fabrication, 3/16 inch side rods with 3/16 inch cross ties.

C. Reinforcing Steel: ASTM A615/A615M, 40 ksi yield grade, deformed billet bars, uncoated finish.

D. Wall Ties: Formed steel wire, 3/16" gage thick, adjustable, wall plate and wire, hot dip galvanized to ASTM A153/A153M B2 finish.

E. Anchor Bolts: Headed, J-shaped or L-shaped.

F. Mortar and Grout: As specified in Section 04065.

G. Copper/Kraft Paper Flashings: 5 oz/sq ft rolled sheet copper bonded to fiber reinforced asphalt treated Kraft paper; "Copper Top".

H. Self Stick SBS Type Flashing:

I. Lap Sealant: Butyl type as specified in Section 07900.

J. Preformed Control Joints: Rubber material. Furnish with corner and tee accessories, cement fused joints.

K. Joint Filler: Closed cell rubber; oversized 50 percent to joint width; self expanding.

L. Building Paper: ASTM D226, No.30 asphalt saturated felt.

M. Weeps: Preformed weep vent by Mortar Net.

N. Mortar Dropping Correction Device: Mortar net.

O. Cleaning Solution: Non-acidic, not harmful to masonry work or adjacent materials.

P. Steel Lintels: size as indicated on Drawings, hot-dip galvanized.

Q. Insulation: Granular Perlite.

PART 3 EXECUTION

3.1 EXAMINATION

A. Section 01300 - Administrative Requirements: coordination and project conditions.

B. Verify field conditions are acceptable and are ready to receive work.

C. Verify items provided by other sections of work are properly sized and located.

D. Verify built-in items are in proper location, and ready for roughing into masonry work.

3.2 PREPARATION

A. Direct and coordinate placement of metal anchors supplied to other sections.

B. Furnish temporary bracing during installation of masonry work. Maintain in place until building structure provides permanent support.

3.3 INSTALLATION

A. Establish lines, levels, and coursing indicated. Protect from displacement.

B. Maintain masonry courses to uniform dimension. Form bed and head joints of uniform thickness.

C. Coursing of Concrete Masonry Units:
1. Bond: Running.
2. Coursing: One unit and one mortar joint to equal 8 inches.
3. Mortar Joints: Concave.

D. Coursing of Brick Units:
1. Bond: Running.
2. Coursing: Three units and three mortar joints to equal 8 inches.
3. Mortar Joints: Concave.

E. Placing And Bonding:
1. Lay solid masonry units in full bed of mortar, with full head joints.
2. Lay hollow masonry units with face shell bedding on head and bed joints.
3. Buttering corners of joints or excessive furrowing of mortar joints are not permitted.
4. Remove excess mortar as work progresses.
5. Interlock intersections and external corners.
6. Do not shift or tap masonry units after mortar has achieved initial set. Where adjustment is required, remove mortar and replace.
7. Perform job site cutting of masonry units with proper tools to assure straight, clean, unchipped edges. Prevent broken masonry unit corners or edges.
8. Cut mortar joints flush where resilient base is scheduled and bitumen dampproofing is applied.
9. Isolate masonry from vertical structural framing members with movement joint as indicated on Drawings.
10. Isolate top of masonry from horizontal structural framing members and slabs or decks with compressible joint filler.

F. Weeps: Furnish weeps in outer wythe at 24 inches oc horizontally above through-wall flashing, above shelf angles and lintels, and at bottom of walls.

G. Mortar Nets: Install mortar net in all cavity and masonry veneer walls in accordance with manufacturer's recommendations. Do not permit mortar to drop or accumulate into cavity air space or to plug weeps.

H. Cavity Wall: Do not permit mortar to drop or accumulate into cavity air space or to plug weeps. Build inner wythe ahead of outer wythe to receive cavity insulation and air/vapor barrier adhesive.

I. Joint Reinforcement And Anchorage - Single Wythe Masonry:
1. Install horizontal joint reinforcement 16 inches oc.
2. Place masonry joint reinforcement in first and second horizontal joints above and below openings. Extend minimum 16 inches each side of opening.
3. Place joint reinforcement continuous in first and second joint below top of walls.
4. Lap joint reinforcement ends minimum 6 inches.

J. Joint Reinforcement And Anchorage - Masonry Veneer:
1. Install horizontal joint reinforcement 16 inches oc.
2. Place masonry joint reinforcement in first and second horizontal joints above and below openings. Extend minimum 16 inches each side of opening.
3. Place joint reinforcement continuous in first and second joint below top of walls.
4. Lap joint reinforcement ends minimum 6 inches.
5. Coordinate following with typical stud spacing of 16 or 24 inch oc.
6. Secure wall ties rod strap anchors to stud framed backing and embed into masonry veneer at maximum 16 inches oc vertically and 16 inches oc horizontally. Place at maximum 3 inches oc each way around perimeter of openings, within 12 inches of openings.

K. Joint Reinforcement And Anchorages - Cavity Wall Masonry:
1. Install horizontal joint reinforcement 16 inches oc.
2. Place masonry joint reinforcement in first and second horizontal joints above and below openings. Extend minimum 16 inches each side of opening.
3. Place joint reinforcement continuous in first and second joint below top of walls.
4. Lap joint reinforcement ends minimum 6 inches.

L. Reinforcement And Anchorages - Multiple Wythe Unit Masonry:
1. Install horizontal joint reinforcement 16 inches oc.
2. Place masonry joint reinforcement in first and second horizontal joints above and below openings. Extend minimum 16 inches each side of opening.
3. Place joint reinforcement continuous in first and second joint below top of walls.
4. Lap joint reinforcement ends minimum 6 inches.
5. Support and secure reinforcing bars from displacement. Maintain position within 1/2 inch of dimensioned position.

M. Masonry Flashings:
1. Extend flashings horizontally through outer wythe at foundation walls, above ledge or shelf angles and lintels, under parapet caps, at bottom of walls, and and turn down on outside face to form drip.
2. Turn flashing up minimum 8 inches and bed into mortar joint of masonry or seal to sheathing over wood steel stud framed backing.
3. Lap end joints minimum 6 inches and seal watertight.
4. Turn flashing, fold, and seal at corners, bends, and interruptions.

N. Lintels:
1. Install loose steel lintels over openings.

2. Install reinforced unit masonry lintels over openings in CMU walls.
3. Openings Up To 42 inches Wide: Place two, No. 4 (M9 M12) reinforcing bars 1 inch from bottom web.
4. Openings From 42 inches Up To 78 inches Wide: Place two, No. 5 reinforcing bars 1 inch from bottom web.
5. Openings Over 78 inches: Reinforce openings as indicated on Drawings.
6. Do not splice reinforcing bars.
7. Support and secure reinforcing bars from displacement.
8. Place and consolidate grout fill without displacing reinforcing.
9. Allow masonry lintels to attain specified strength before removing temporary supports.
10. Maintain minimum 8 inch bearing on each side of opening.

O. Grouted Components:
1. Reinforce bond beam with 2, No. 4 bars, 1 inch from bottom webs.
2. Reinforce pilaster with 4, No. 4 bars.
3. Lap splices bar diameters required by code.
4. Support and secure reinforcing bars from displacement.
5. Place and consolidate grout fill without displacing reinforcing.
6. At bearing locations, fill masonry cores with grout for minimum 12 inches both sides of opening.

P. Control And Expansion Joints:
1. Do not continue horizontal joint reinforcement through control and expansion joints.
2. Install preformed control joint device in continuous lengths. Seal butt and corner joints.
3. Size control joint in accordance with Section 07900 for sealant performance.
4. Form expansion joint by omitting mortar and cutting unit to form open space

Q. Insulation:
1. Fill all CMU cells with granular perlite.

R. Built-In Work:
1. As work progresses, install built-in metal door frames, window frames, wood nailing strips, anchor bolts, plates, and other items to be built-in the work and furnished by other sections.
2. Install built-in items plumb and level.
3. Bed anchors of metal door frames in adjacent mortar joints. Fill frame voids solid with grout or mortar. Fill adjacent masonry cores with grout minimum 12 inches from framed openings.
4. Do not build in materials subject to deterioration.

S. Cutting And Fitting:
1. Cut and fit for chases, pipes, conduit, sleeves, grounds, and. Coordinate with other sections of work to provide correct size, shape, and location.
2. Obtain Architect/Engineer’s approval prior to cutting or fitting masonry work not indicated or where appearance or strength of masonry work may be impaired.

3.4 ERECTION TOLERANCES

A. Section 01400 - Quality Requirements: Tolerances.

B. Maximum Variation From Alignment of Pilasters: 1/4 inch.

C. Maximum Variation From Unit to Adjacent Unit: 1/16 inch.

D. Maximum Variation from Plane of Wall: 1/4 inch in 10 ft and 1/2 inch in 20 ft or more.

E. Maximum Variation from Plumb: 1/4 inch per story non-cumulative; 1/2 inch in two stories or more.

F. Maximum Variation from Level Coursing: 1/8 inch in 3 ft and 1/4 inch in 10 ft; 1/2 inch in 30 ft.

G. Maximum Variation of Joint Thickness: 1/8 inch in 3 ft.

H. Maximum Variation from Cross Sectional Thickness of Walls: 1/4 inch.

I. Maximum Variation for Steel Reinforcement:
   1. Plus or minus 1/2 inch when distance from centerline of steel to opposite face of masonry is 8 inches or less.
   2. Plus or minus 1 inch when distance is between 8 and 24 inches.
   3. Plus or minus 1 1/4 inch when distance is greater than 24 inches.
   4. Plus or minus 2 inches from location along face of wall.

3.5 FIELD QUALITY CONTROL

A. Section 01400 - Quality Requirements: Testing and Inspection

B. Concrete Masonry Units: Test each type in accordance with ASTM C140.

3.6 CLEANING

A. Section 01700 - Execution Requirements: Final cleaning.

B. Remove excess mortar and mortar smears as work progresses.

C. Replace defective mortar. Match adjacent work.

D. Clean soiled surfaces with cleaning solution.

E. Use non-metallic tools in cleaning operations.

END OF SECTION

DIVISION 5

METALS

DIVISION 6

WOOD AND PLASTIC

SECTION 06114

ROUGH CARPENTRY

PART 1 GENERAL

1.1 SUMMARY

A. Section includes blocking in wall and roof openings; wood furring and grounds; concealed wood blocking for support of toilet and bath accessories, wall cabinets, wood trim and wood soffits, plywood roof deck; telephone and electrical panel back boards; and preservative treatment of wood.

B. Related Sections:
1. Section 09260 – Gypsum Board Assemblies: Window & Door openings to receive wood blocking.

1.2 REFERENCES

A. American National Standards Institute:
1. ANSI A208.1 - Mat-Formed Wood Particleboard.

B. American Wood-Preservers' Association:
1. AWPA C1 - All Timber Products - Preservative Treatment by Pressure Process.
2. AWPA C20 - Structural Lumber - Fire-Retardant Treatment by Pressure Processes.

C. National Institute of Standards and Technology:
1. NIST PS 20 - American Softwood Lumber Standard.

D. The Redwood Inspection Service:
1. RIS - Standard Specifications for Grades of California Redwood Lumber.

E. Southern Pine Inspection Bureau:
1. SPIB - Standard Grading Rules for Southern Pine Lumber.

F. West Coast Lumber Inspection Bureau:
1. WCLIB - Standard Grading Rules for West Coast Lumber.

G. Western Wood Products Association:
1. WWPA G-5 - Western Lumber Grading Rules.

1.3 SUBMITTALS

A. Section 01330 - Submittal Procedures: Submittal procedures.

B. Product Data: Submit technical data on wood preservative and fire retardant treatment materials and application instructions.

1.4 QUALITY ASSURANCE

A. Perform Work in accordance with the following:
   1. Lumber Grading Agency: Certified by NIST PS 20.
   2. Plywood Grading Agency: Certified by APA/EWA.

PART 2 PRODUCTS

2.1 MATERIALS

A. Lumber Grading Rules: AP&PA. RIS. SPIB. WCLIB. WWPA G-5.

B. Miscellaneous Framing: Stress Group D species, Southern Yellow Pine, grade 19 percent maximum moisture content after treatment.

C. Plywood: APA/EWA Rated Sheathing Structural I, Grade C-D; Exposure Durability sanded.

D. Soffit Material: 2 x 6 KD (SYP) tongue and groove.

2.2 ACCESSORIES

A. Fasteners and Anchors:
   1. Fasteners: Hot dipped galvanized steel.
   2. Anchors: Expansion shield and lag bolt type for anchorage to solid masonry or concrete. Bolt or ballistic fastener for anchorages to steel.
   3. All fasteners and anchors shall be non-corrosive.

2.3 FACTORY WOOD TREATMENT

A. Wood Preservative (Pressure Treatment): AWPA C1 using water borne preservative with 0.25 percent retainage. Manufactured by Celcore.

B. Fire Retardant Treatment: Pressure treatment, AWPA C20 for lumber and AWPA C27 for plywood, Interior Type, chemically treated and pressure impregnated; capable of providing a maximum flame spread/smoke development rating of 25/450.

PART 3 EXECUTION

3.1 EXAMINATION

A. Section 01300 - Administrative Requirements: Verification of existing conditions before starting work.

B. Verify substrate conditions are ready to receive blocking, curbing and framing.

3.2 PREPARATION

A. Coordinate placement of blocking, curbing and framing items.

3.3 INSTALLATION

A. Set members level and plumb, in correct position.

B. Place horizontal members, crown side up.

C. Construct curb members of solid wood sections.

D. Curb roof openings except where prefabricated curbs are provided. Form corners by alternating lapping side members.

E. Coordinate curb installation with installation of decking and support of deck openings, parapet construction, and expansion joints.

F. Space framing and furring 16 inches oc.

G. Secure sheathing to framing members with ends over firm bearing and staggered.

H. Install telephone and electrical panel back boards with plywood sheathing material where required. Size back boards 12 inches beyond size of electrical and telephone panel.

I. Install tongue and groove soffit with galvanized concealed nails.

3.4 SCHEDULES

A. Telephone and Electrical Panel Boards: 3/4 inch thick, square edges, and pressure preservative treated.

B. Miscellaneous Wood Blocking, Curbs; Southern Yellow Pine, 19 percent maximum moisture content, pressure preservative treatment.

C. Soffit: 2 x 6 KD (SYP) tongue and groove.

D. Roof deck: 5/8" CDX plywood.

END OF SECTION

SECTION 06410

CUSTOM CASEWORK

PART 1 GENERAL

1.01 SECTION INCLUDES

A. Fabricated cabinet units.

B. Countertops.

C. Cabinet hardware.

1.02 RELATED SECTIONS

A. Section 06114 - Wood Blocking and Curbing: Grounds and support framing.

B. Section 09900 - Painting: Finishing cabinet exterior and interior.

C. Division 15 - Mechanical: Plumbing.

D. Division 16 - Electrical.

1.03 REFERENCES

A. ANSI/BHMA A156.9 - Cabinet Hardware.

B. AWI - Quality Standards.

C. FS MM-L-736 - Lumber, Hardwood.

D. FS MMM-A-130 - Adhesive, Contact.

E. National Electric Manufacturers Association (NEMA) LD3 - High Pressure Decorative Laminates.

F. PS 1 - Construction and Industrial Plywood.

G. PS 20 - American Softwood Lumber Standard.

1.04 SUBMITTALS

A. Submit under provisions of Section 01300.

B. Product Data: For plywood, high-pressure decorative laminate, adhesive for bonding plastic laminate, cabinet hardware and accessories, and finishing materials and processes.

C. Shop Drawings: Show location of each item, dimensioned plans and elevations, large-scale details, attachment devices, and other components.
   1. Show details full size.
   2. Show locations and sizes of furring, blocking, and hanging strips, including concealed blocking and reinforcement specified in other Sections.
   3. Show locations and sizes of cutouts and holes for plumbing fixtures, faucets, and other items installed in architectural woodwork.
   4. Include statement on front page indicating that Fabrication, Finishing and Installation will be certified for compliance under the AWI Quality Certification Program.

D. Samples for Initial Selection: Manufacturer's color charts consisting of units or sections of units showing the full range of colors, textures, and patterns available for each type of material indicated.
   1. Shop-applied paint finishes.
   2. Plastic laminates.

E. Samples for Verification:
   1. 3cm quartz countertop.

F. Product Certificates: Signed by manufacturers of woodwork certifying that products furnished comply with requirements.

1.05 QUALITY ASSURANCE

A. Perform work in accordance with AWI Custom quality except where otherwise noted to be Premium.

1.06 QUALIFICATIONS

A. Manufacturer: Company specializing in manufacturing the products specified in this section with minimum three years experience and AWI certified.

1.07 FIELD MEASUREMENTS

A. Verify that field measurements are as indicated on shop drawings.

1.08 COORDINATION

A. Coordinate work under provisions of Section 01039.

B. Coordinate the work with plumbing and electrical rough-in and fixturing.

PART 2 PRODUCTS

2.01 WOOD MATERIALS

A. Lumber: (see drawings)

1. Plywood – (CDX type) to receive stainless steel panel at wet location counter tops.

2.02 SHEET MATERIALS (see drawings)

A. Plywood: PS 51; core materials of veneer, type of glue recommended for application; face veneer and cuts as follows:
   1. Plywood – (CDX type) to receive stainless steel panel at wet location.

2.05 ACCESSORIES

A. Adhesive: Type recommended by quartz manufacturer to suit application.

B. Fasteners: Size and type to suit application.

C. Bolts, Nuts, Washers, Lags, Pins, and Screws: Of size and type to suit application.

D. Concealed Joint Fasteners: Threaded steel.

2.06 RESTROOM COUNTERTOPS (See Finish Schedule for selections)

A. 3 cm Quartz

B. Or Equal.

2.07 FABRICATION

A. Shop assemble casework for delivery to site in units easily handled and to permit passage through building openings.

B. When necessary to cut and fit on site, provide materials with ample allowance for cutting. Provide trim for scribing and site cutting.

C. Apply quartz finish in full uninterrupted sheets consistent with manufactured sizes. Fit corners and joints hairline; secure with concealed fasteners. Locate counter butt joints minimum 2 feet from sink cut-outs.

D. Mechanically fasten back splash to countertops with steel brackets at 16 inches on center.

E. Provide cutouts for plumbing fixtures, inserts, appliances, outlet boxes fixtures and fittings. Verify locations of cutouts from on-site dimensions. Seal contact surfaces of cut edges.

2.10 FINISHING

A. Sand work smooth and set exposed nails and screws.

B. Apply wood filler in exposed nail and screw indentations.

C. Seal surfaces in contact with cementitious materials.

PART 3 EXECUTION

3.01 EXAMINATION

A. Verify adequacy of backing and support framing.

3.02 INSTALLATION

A. Set and secure casework in place; rigid, plumb, and level.

B. Use fixture attachments in concealed locations for wall mounted components.

C. Use concealed joint fasteners to align and secure adjoining cabinet units and counter tops.

D. Carefully scribe casework abutting other components, with maximum gaps of 1/32 inch. Do not use additional overlay trim for this purpose.

E. Secure cabinet and counter bases to floor using appropriate angles and anchorages.

F. Countersink anchorage devices at exposed locations. Conceal with solid wood plugs of species to match surrounding wood; finish flush with surrounding surfaces.

3.03 ADJUSTING

A. Adjust work under provisions of Section 01700.

B. Adjust moving or operating parts to function smoothly and correctly.

3.04 CLEANING

A. Clean work under provisions of 01700.

B. Clean casework, counters, shelves, hardware, fittings and fixtures.

END OF SECTION

DIVISION 7

THERMAL AND MOISTURE PROTECTION

SECTION 07110

DAMPPROOFING

PART 1 GENERAL

1.1 SUMMARY

A. Section includes cold applied emulsified asphalt bituminous dampproofing.

B. Related Sections:
1. Section 04813 – Unit Masonry Assemblies: CMU Substrate

1.2 REFERENCES

A. ASTM International:
1. ASTM D41 - Standard Specification for Asphalt Primer Used in Roofing, Dampproofing, and Waterproofing.
2. ASTM D43 - Standard Specification for Coal Tar Primer Used in Roofing, Dampproofing, and Waterproofing.
3. ASTM D449 - Standard Specification for Asphalt Used in Dampproofing and Waterproofing.
4. ASTM D450 - Standard Specification for Coal-Tar Pitch Used in Roofing, Dampproofing, and Waterproofing.
5. ASTM D1227 - Standard Specification for Emulsified Asphalt Used as a Protective Coating for Roofing.
6. ASTM D3747 - Standard Specification for Emulsified Asphalt Adhesive for Adhering Roof Insulation.
7. ASTM D4586 - Asphalt Roof Cement, Asbestos-Free.
8. ASTM D5643 - Coal Tar Roof Cement, Asbestos Free.

B. National Roofing Contractors Association:
1. NRCA - The NRCA Waterproofing and Dampproofing Manual.

1.3 SUBMITTALS

A. Section 01330 - Submittal Procedures: Submittal procedures.

B. Product Data: Submit properties of primer, bitumen, and mastics.

C. Manufacturer's Installation Instructions: Submit special procedures and perimeter conditions requiring special attention.

1.4 ENVIRONMENTAL REQUIREMENTS

A. Section 01600 - Product Requirements.

B. Maintain ambient temperatures above 40 degrees F for 24 hours before and during application until membrane has cured.

PART 2 PRODUCTS

2.1 BITUMINOUS DAMPPROOFING

A. Manufacturers:
   1. Sonneborn: Model 700B, or equal.
   2. Karnak Corp: Model 83AF, or equal.
   3. W.R. Meadows, or equal.

2.2 COMPONENTS

A. Cold Asphaltic Materials:
   1. Emulsified Asphalt: ASTM D1227, reinforced with non-asbestos fibers.
   2. Asphalt Primer: ASTM D41, compatible with substrate.

PART 3 EXECUTION

3.1 EXAMINATION

A. Section 01300 - Administrative Requirements: Coordination and project conditions.

B. Verify substrate surfaces are durable, free of matter detrimental to adhesion or application of dampproofing system.

C. Verify items penetrating surfaces to receive dampproofing are securely installed.

3.2 PREPARATION

A. Protect adjacent surfaces not designated to receive dampproofing.

B. Clean and prepare surfaces to receive dampproofing.

C. Do not apply dampproofing to surfaces unacceptable to manufacturer or applicator.

D. Apply mastic to seal penetrations, small cracks, or minor honeycomb in substrate.

3.3 INSTALLATION

A. Prime surfaces in accordance with manufacturer’s recommendations.

B. Apply cold bitumen with roller.

C. Apply bitumen in one coat, continuous and uniform, at rate recommended by manufacturer.

D. Seal items Projecting through dampproofing surface with mastic. Seal watertight.

3.4 SCHEDULES

A. CMU and Brick Cavity Walls: Exterior (cavity) face of interior CMU.

END OF SECTION

SECTION 07213

BATT INSULATION

PART 1 GENERAL

1.01 SECTION INCLUDES

A. Batt insulation ceiling.

B. Batt insulation for filling perimeter window and door shim spaces, crevices in exterior wall and roof.

C. Batt insulation in interior walls and ceilings.

1.02 REFERENCES

A. ASTM E84 - Test Method for Surface Burning Characteristics of Building Materials.

B. NFPA 255 - Test of Surface Burning Characteristics of Building Materials.

C. UL 723 - Tests for Surface Burning Characteristics of Building Materials.

1.03 SYSTEM DESCRIPTION

A. Materials of This Section: Provide continuity of thermal barrier at building enclosure elements.

1.04 SUBMITTALS

A. Submit under provisions of Section 01300.

B. Product Data: Provide data on product characteristics, performance criteria.

1.05 COORDINATION

A. Coordinate work under provisions of Section 01039.

PART 2 PRODUCTS

2.01 MANUFACTURERS - INSULATION MATERIALS

A. Certain-Teed Products Corporation.

B. Manville Building Materials Corporation.

C. Owens-Corning Fiberglass Corporation.

D. Substitutions: Under provisions of Section 01600.

2.02 MATERIALS

A. Batt Insulation: ASTM C665; preformed glass fiber batt; friction fit, conforming to the following:
   1. Thermal Resistance: 6”; R-22
   2. Facing: Unfaced
   3. Flame/Smoke Properties: 75/450 in accordance with ASTM E84, UL 723, and NFPA 255.

B. Staples: Steel wire; galvanized; type and size to suit application.

C. Tape: Bright aluminum self-adhering type, 2 inch wide.

D. Insulation Fasteners: Steel impale spindle and clip on flat metal base, self adhering backing, length to suit insulation thickness, capable of securely and rigidly fastening insulation in place.

PART 3 EXECUTION

3.01 EXAMINATION

A. Verify site conditions under provisions of Section 01039.

B. Verify that substrate, adjacent materials, and insulation are dry and ready to receive insulation.

3.02 INSTALLATION

A. Install insulation in accordance with manufacturer's instructions.

B. Trim insulation neatly to fit spaces. Insulate miscellaneous gaps and voids.

C. Fit insulation tight in spaces and tight to exterior side of mechanical and electrical services within the plane of insulation.

D. Install with factory applied vapor retarder membrane facing warm side of building spaces. Lap ends and side flanges of membrane over framing members.

E. Staple facing flanges in place at maximum 6 inches oc or tape in place. Retain in place with spindle fasteners where so indicated.

F. Tape seal butt ends, lapped flanges, and tears or cuts in membrane.

3.04 SCHEDULE

A. Interior Ceilings: 6” thick unfaced batt.

END OF SECTION

SECTION 07410

PREFORMED ALUMINUM SOFFIT PANELS, SOLID AND PERFORATED

PART 1 - GENERAL

1.1 DESCRIPTION OF WORK

A. This section covers the pre-finished, pre-fabricated Factory Manufactured Aluminum Soffit System. All metal trim, accessories, fasteners, insulation and sealants indicated on the drawings are part of this section.

B. Related Work Specified Elsewhere
1. Roof Deck structural steel, flat roof systems, preformed metal standing seam roofing, perimeter edge systems, roof hatches, firestopping not included in this section

1.2 QUALITY ASSURANCE

A. Petersen Aluminum Corp, Tyler, TX, 800-441-8661 products establish a minimum of quality required.

B. Manufacturer and erector shall demonstrate experience of a minimum of five (5) years in this type of project.

1.3 SUBSTITUTIONS

A. The material, products and equipment specified in this section establish a standard for required function, dimension, appearance and quality to be met by any proposed substitution.

1.4 SYSTEM DESCRIPTION

A. Material to comply with:
1. ASTM B209 Standard Specification for Aluminum and Aluminum-Alloy Sheet and Plate

1.5 SOFFIT SYSTEM PERFORMANCE TESTING

A. Soffit System shall be designed to meet Standard Building Code wind load requirements.

B. Soffit System shall be designed to meet applicable Local Building Code and the Soffit System shall have been tested by the Manufacturer per ASTM E-330 and have the applicable Load Tables published from this Air Bag testing for negative loads.

1.6 WARRANTIES

A. Finish warranty: Manufacturer's standard form in which manufacturer agrees to repair finish or replace standing seam metal roof panels that show evidence of deterioration of

factory-applied finish within specified warranty period.

1. Exposed Panels Finish - deterioration includes the following:
    a. Color fading more than 5 hunter units when tested according to ASTM D 2244
    b. Chalking in excess of a No. 8 rating when tested according to ASTM D 4214
    c. Cracking, checking, peeling or failure of a paint to adhere to a bare metal.
2. Warranty Period: 20 Years from the date of substantial completion

1.7 SUBMITTALS

A. Furnish detailed drawings showing profile and gauge of exterior sheets, location and type of fasteners, location, gauges, shape and method of attachment of all trim locations and types of sealants, and any other details as may be required for a weather-tight installation.

B. Provide finish samples of all colors specified.

C. LEED Submittals
1. Product data for Credit MR 4.1 and credit MR 4.2: Indicating the percentages by weight of postconsumer and preconsumer recycled content for products having recycled content

1.7 DELIVERY, STORAGE AND HANDLING

A. Deliver components, sheets, metal soffit panels and other manufactured items so as not to be damaged or deformed. Package metal soffit panels for protection during transportation and handling.

B. Unload, store and erect metal soffit panels in a manner to prevent bending, warping, twisting and surface damage.

C. Stack metal soffit panels on platforms or pallets, covered with suitable weathertight and ventilated covering. Store metal soffit panels to ensure dryness. Do not store metal soffit panels in contact with other materials that might cause staining, denting or other surface damage.

D. Protect strippable protective coating on any metal coated product from exposure to sunlight and high humidity, except to the extent necessary for material installation.

1.8 PROJECT CONDITIONS

A. Weather Limitations: proceed with installation only when existing and forecasted weather conditions permit metal roof panel work to be performed.

B. Field Measurements: Verify actual dimensions of construction contiguous with metal roof panels by field measurements before fabrication.

PART 2 - PRODUCTS

2.1 PANEL DESIGN

A. Soffit panels shall be 12" wide by 3/8" deep and manufacturer shall be able to provide all three options of panel surface: Full Vent, Half Vent or Solid Soffit in the specified color(s).

2.2 ACCEPTABLE MANUFACTURERS

A. This project is specified around the roofing product of Petersen Aluminum Corporation, Petersen Aluminum Corp, Tyler, TX, 800-441-8661, PAC-850 Soffit.

B. Other acceptable manufacturers, if they comply with specification:
   1. IMETCO, Tucker, GA, Soffit Panel only
   2. ATAS Aluminum, Allentown, PA, "Wind-Lock" Panel only

2.3 MATERIALS AND FINISHES

A. Materials: ASTM B-209 quality aluminum, 3105-H14 Alloy and Temper material. Aluminum shall be tension leveled (temper passed and stretcher leveled) with camber of a maximum of 1/4" in 20 feet, manufactured in the USA, and shall be .032" thick aluminum, US standard grade.
   1. Color shall be PAC-CLAD Kynar 500 *Standard Pac-Clad Finish
   2. Panel Surface shall be: Full Vent Half Vent Solid

B. Finishes: Finish shall be Kynar 500 or Hylar 5000 Fluorocarbon coating with a top side film thickness of 0.70 to 0.90 mil over 0.25 to 0.31 mil prime coat to provide a total dry film thickness of 0.95 to 1.25 mil. Finish shall conform to tests for adhesion, flexibility and longevity as specified by Kynar 500 or Hylar 5000 finish supplier.

C. Field protection must be provided by the Contractor at the job site so material is not exposed to weather and moisture.

D. If any strippable film coating is applied to any pre-finished panels or materials for protection during shipping, strippable film shall be removed prior to installation.

E. Forming: use continuous and rolling method. No end laps on panels. No "portable rollforming" machines will be permitted on this project; no installer-owned or installer-rented machines shall be permitted. It is the intent of the Architect to provide Factory-Manufactured soffit systems only for this project.

F. Trim: Trim shall be fabricated of the same material and finish to match the profiled sheeting and press broken in lengths of 10 - 12 feet. Trim shall be formed only by the manufacturer or their approved dealer. Trim to be erected in overlapped condition. Use lap strips only as indicated on drawings. Miter conditions shall be factory welded material to match the sheeting.

G. Fasteners: Fasteners shall be 400 series stainless steel, dished washers stainless steel with bonded neoprene.

H. Zees: Where required by design of primary structural framing system, zees shall be used to span between beams and/or other joists. Thermally responsive base and top clips shall be fastened to the zees on 12" centers.

I. Insulation: See Section 07210: Building Insulation.

2.4 SEALANTS

A. Provide two-part polysulfide class B non-sag type for vertical and horizontal joints or

B. One part polysulfide not containing pitch or phenolic extenders or

C. Exterior grade silicone sealant recommended by roofing manufacturer or

D. One part non-sag, gun grade exterior type polyurethane recommended by the roofing manufacturer.

2.5 FABRICATION

A. Comply with dimensions, profile limitations, gauges and fabrication details shown and if not shown, provide manufacturer's standard product fabrication.

B. Fabricate components of the system in factory, ready for field assembly.

C. Fabricate components and assemble units to comply with fire performance requirements specified.

D. Apply specified finishes in conformance with manufacturer's standard, and according to manufacturer's instructions.

PART 3 EXECUTION

3.1 INSPECTION

A. Examine alignment of structural steel and related supports, primary and secondary roof framing, solid roof sheathing, prior to installation.

B. For the record, prepare written report, endorsed by installer, listing conditions detrimental to performance of the Work.

C. Proceed with installation only after unsatisfactory conditions have been corrected.

3.2 FASTENERS

A. Secure units to supports

B. Place fasteners as indicated in manufacturer's standards.

3.3 INSTALLATION

A. Panels shall be installed plumb and true in a proper alignment and in relation to the structural framing. The erector must have at least five years successful experience with similar applications.

B. Install soffit panels, fasteners, trim and related sealants in accordance with approved shop drawings and as may be required for a weather-tight , complete and architecturally

pleasing installation.

C. Remove all strippable coating and provide a dry-wipe down cleaning of the panels as they are erected.

D. Panels attached to any TREATED LUMBER MUST HAVE AN APPROPRIATE VAPOR BARRIER INSTALLED OVER THE TREATED LUMBER PRIOR TO INSTALLING ANY SOFIT PANELS OR RELATED FLASHINGS. DO NOT ALLOW ANY METAL PRODUCTS TO COME INTO DIRECT CONTACT WITH TREATED LUMBER

3.4 DAMAGED MATERIAL

A. Upon determination of responsibility, repair or replace damaged metal panels and trim to the satisfaction of the Architect and Owner.

END OF SECTION

SECTION 07611

PRE-FABRICATED SHEET METAL ROOFING

PART 1 GENERAL

1.0 SUMMARY

A. Section includes pre-finished galvanized sheet steel roofing, related accessories, ridges, eaves, corners, rakes, miscellaneous flashing, attaching devices, underlayment and insulation.

B. Related Sections:
1. Section 07620 - Sheet Metal Flashing and Trim.
2. Section 06114 – Wood Blocking and Curbing: Treated wood sleepers.

1.1 PREFABRICATED SHEET METAL ROOFING SYSTEMS

A. Steel Deck Substrate
1. Prefabricated Sheet Metal Roof
2. Asphalt-Based Self Adhering Membrane Roofing Underlayment
3. 5/8" CDX Plywood
4. Steel Deck Substrate

1.2 SUBMITTAL

A. Shop drawings: Show roofing system with flashings and accessories in plan and elevation; sections and details. Include metal thickness' and finishes, panel lengths, joining details, anchorage details, flashings and special fabrication provisions for termination and penetrations; purlin and girt locations, thermal expansion provisions and special supports. Indicate relationships with adjacent and interfacing work. Shop drawings must be completed by the metal panel manufacturer's engineering department. Any and/or all changes recommended by the successful bidder must be approved by the manufacturer in writing prior to submittal.

B. Product Data: Include manufacturer's detailed material and system description, sealant and closure installation instructions, engineering performance data and finish specifications.

C. Design test reports:

1. Indicate fastener types and spacings; and provide fastener pullout values.

2. Submit copy of manufacturer's minimum design load calculations according to ASCE 7.
3. Submit copy of certification from manufacturer stating that specified system has been tested in accordance with ASTM-1592 requirements by an independent Engineering Firm. All test results must be submitted including Air (ASTM E 283 & E1680) and Water (ASTM E 331 & E 1646) Infiltration Tests. These test

results must meet or exceed those listed in Section 1.8 (Design and Performance Criteria) and be stamped by an independent Engineering Firm.

D. Samples:
1. Submit two samples 8 inch by 8 inch in size illustrating metal roofing mounted on plywood backing illustrating typical seam, eave, valley, ridge, junction to vertical dissimilar surface, material, and finish. Samples shall also show 'fix-point' fasteners for panel.

1.3 INSTALLER QUALIFICATIONS:
1. Engage an experienced metal roofing contractor (erector) to install standing seam system who has a minimum of three (3) years experience specializing in the installation of structural standing seam metal roof systems.
2. Contractor must be certified by manufacturer specified as supplier of structural standing seam system and obtain written certification from manufacturer that installer is approved for installation of specified system on this particular project. Contractor must supply owner with a copy of this certification.
3. Successful contractor is required to maintain a full-time supervisor/foreman who is on the job-site at all times during installation of new roof system. Foreman must have a minimum of five (5) years experience with the installation of system similar to that specified.
4. Successful contractor must obtain all components of roof system from a single manufacturer including any roll good materials if required. Any secondary products that are required which cannot be supplied by the specified manufacturer must be recommended and approved in writing by primary manufacturer prior to bidding.
5. If required, fabricator/installer shall submit work experience and evidence of adequate financial responsibility. The owner's representative reserves the right to inspect fabrication facilities in determining qualifications.

1.4 MANUFACTURERS QUALIFICATIONS / ALTERNATE MANUFACTURERS:

A. The materials outlined in the Material and Method Specifications are the type of materials that should be used on this project. Bidder will not be allowed to supply panels formed at the job-site on portable roll formers; metal panels must be pre-manufactured and engineered for this project. Bidder will not be allowed to change materials after the bid opening date.

1.5 DELIVERY, STORAGE, AND HANDLING:

A. Manufacturer's responsibility:
1. Protect components during fabrication and packing from mechanical abuse, stains, discoloration, and corrosion.
2. Provide protective interleaving between contact areas of exposed surfaces to prevent abrasion during shipment, storage, and handling.

B. Installer's responsibility:
1. Store materials off ground providing for drainage; under cover providing for air circulation; and protected from wind movement, foreign material contamination, mechanical damage, cement, lime or other corrosive substances.

2. Handle materials to prevent damage to surfaces, edges and ends of roofing sheets and sheet metal items. Damaged material shall be rejected and removed from the site.
3. Protect panels from wind-related damages.
4. Inspect materials upon delivery. Reject and remove physically damaged or marred material from project site.

1.6 JOB CONDITIONS:

A. Determine that work of other trades will not hamper or conflict with necessary fabrication and storage requirements for preformed metal roofing system.

B. Protection:
1. Provide protection or avoid traffic on completed roof surfaces.
2. Do not overload roof with stored materials.
3. Support no roof-mounted equipment directly on roofing system.

C. Ascertain that work of other trades which penetrates the roof or is to be made watertight by the roof is in place and approved prior to installation of roofing.

1.7 QUALITY CRITERIA:

A. Applicable standards:
1. American Iron and Steel Institute (AISI):
1986 Specification for the Design of Cold-Formed Steel Structural Members.
2. American Society for Testing and Materials (ASTM):
A792-96 Specification for Steel Sheet, 55% Aluminum-Zinc Alloy-Coated by the Hot-Dip Process.

B209-96 Specification for Aluminum and Aluminum-Alloy Sheet and Plate.

A653-96 Specification for Steel Sheet Zinc-coated (galvanized) or Zinc-Iron Alloy-coated (Galvannealed) by the Hot-Dip process.

D1056-91 Specification for Flexible Cellular Materials - Sponge or Expanded Rubber.

D3575-84 Test Methods for Flexible Cellular Materials made from Olefin Polymers.

E283-93 Test Method for Rate of Air Leakage Through Exterior Windows, Curtain Walls, and Doors under Specified Pressure Differences Across the Specimen.

E1680-95 Test Method for Rate of Air Leakage Through Exterior Metal Roof Panel Systems.

E1592-95 Standard Test Method for Structural Performance of Sheet Metal Roof and Siding Systems by Uniform Static Air Pressure Difference.

E331-86 Test Method for Water Penetration of Exterior Windows, Curtain Walls, and Doors by Uniform Static Air Pressure Difference.

E1646-95 Test Method for Water Penetration of Exterior Metal Roof Panel Systems by Uniform Static Air Pressure Difference.

3. Sheet Metal and Air Conditioning Contractors National Association (SMACNA): 2000 Architectural Sheet Metal Manual.
4. Underwriters' Laboratories (UL):
   Standard UL - 580 Tests for Wind-Uplift Resistance of Roof Assemblies.
   Standard UL - 263 Tests for Fire Resistance
   Standard UL - 790 Class A Fire Rating.
5. Factory Mutual Research (FM): Standard FM 4471 Tests for Wind-Uplift Resistance of Roof Assemblies.

B. Applicable erection tolerances: Maximum variation from true planes or lines: 1/4" in 20'-0"; 3/8" in 40'-0" or more.

1.8 DESIGN AND PERFORMANCE CRITERIA:

A. Thermal Movement:
1. Completed metal roofing and flashing system shall be capable of withstanding expansion and contraction of components caused by changes in temperature without buckling, producing excess stress on structure, anchors or fasteners, or reducing performance ability.
2. Interface between panel and clip shall provide for unlimited thermal movement in each direction along the longitudinal direction.
3. Location of metal roofing rigid connector shall be at roof eave unless otherwise approved and designed per job conditions by specified manufacturer.

B. Uniform wind load capacity:
1. Installed roof system shall withstand positive and negative design wind loading pressures complying with:
   a. **ASCE 7-10**
   b. Safety Factor of 2.5 reduced for wind to 1.67
   c. Category III Building with a Importance Factor of 1.0.
   d. Normal (Basic)Wind Speed of **132 mph.**
   e. Ultimate Pullout Value, Wood Decks is **459 lbs/screw**
   f. Exposure Category is D.
   g. Mean Roof Height is 35'-6" ft.
   h. Minimum Building Width is 102 ft.
   I. Roof Slope is 5:12

Design Pressures: (Verify with structural drawings) The loads shown are based on V(ult) Wind Speeds and applicable reduction factors may be applied.

	POSITIVE	NEGATIVE
Roof Panel - Zone 1 (mid-roof)	**47.7 psf**	**-75.8 psf**
Ridges & Eaves - Zone 2	**47.7 psf**	**-132 psf**
Corners - Zone 3	**47.7 psf**	**-195.2 psf**

2. Capacity shall be determined using pleated airbag method in accordance with ASTM E 1592, testing of sheet metal roof panels as follows:

   (7.1) Roof test specimens shall be either full length or representative of the main body of the roof, free from edge restraint or perimeter attachments, continuous over one or more supports, and containing at least five panel modules for standing seam roof.

   (7.1.2) No attachments shall be permitted at sides or end perimeter other than those that occur uniformly throughout roof. Side and end seals shall be flexible and in no way restrain crosswise distortion of panels.

   (7.2.1) Panels and accessories shall be production materials of same type and thickness proposed for use on project.

3. Installed roof system shall carry positive uniform design loads with a maximum system deflection of L/180 as measured at the rib (web) of the panel.

C. Underwriters' Laboratories, Inc., (UL), wind uplift resistance classification: Roof assembly shall be classified as Class UL90, as defined by UL 580.

D. Underwriters' Laboratories, Inc., (UL) fire resistance P ratings for roof assemblies. Underwriters' Laboratories, Inc., (UL) Class A fire rating per UL 790.

E. ASTM E283: Static pressure air infiltration:

Pressure	Leakage Rate
1.57 PSF	0.0007 cfm/sq.ft.
6.24 PSF	0.0002 cfm/sq.ft.
20.0 PSF	0.0036 cfm/sq.ft.

F. ASTM E331: Static pressure water infiltration:

Pressure	Result
5 Gal/Hr Per S.F. and Static Pressure Of 20.0 Psf for 15 minutes	No Leakage

G. Water penetration (dynamic pressure): No water penetration, other than condensation, when exposed to dynamic rain and 70 mph wind velocities for not less than five minutes duration, when tested in accord with principles of AAMA 501.1.

I. Capacities for gauge, span or loading other than those tested may be determined by interpolation of test results within the range of test data. Extrapolation for conditions outside test range are not acceptable.

1.9 WARRANTY:

A. Roofing Guarantees:
1. The roof system and associated work, shall be guaranteed against leaks from faulty or defective materials and workmanship for five (5) years, starting on the date of Owner's acceptance of the project.
2. The "Roofing Guarantee" shall be executed in duplicate, signed by the appropriate parties and submitted to Owner through the Architect.
3. Representatives of the Designer, Owner, the General Contractor, the Roofing Contractor and Roofing Manufacturer's representative shall make inspections of the roofing system toward the end of two (2) year warranty period and toward the end of the Roofing Contractor's guarantee period. The Roofing System Manufacturer's authorized technical representative shall inspect the roofing system near the end of the conclusion of the Manufacturer's Guarantee and report same to Owner. The Roofing Contractor or Roofing Systems Manufacturer, as applicable, shall make approved repairs and/or replacements covered by the Guarantee. The project will not be accepted until the Roofing Contractor's Guarantee and the Roofing Manufacturer's Guarantee are both executed in strict accordance with the Contract Documents and data from Paragraph E below of these Instructions, have been submitted and accepted by the Owner.

B. Roofing Manufacturer's Guarantee:
1. A separate **twenty (20)** year guarantee shall be furnished by the manufacturer of the materials of the roofing system. The sample form of the guarantee shall be delivered to the Architect from the manufacturer through the Contractor. The manufacturer is to include a list of all component parts of the roofing system that shall be guaranteed.
2. The Roofing Manufacturer's Guarantee shall guarantee at the manufacturer's own cost and expense, to make or cause to be made such repairs to or replacement of, to correct any and all faulty installations or material of the roofing system, to keep the roofing system in a watertight condition throughout the **20-year** guarantee period. The guarantee shall not be prorated. The executed guarantee shall be delivered to the Architect in three original counterparts prior to acceptance of the Work.

C. One-Year Warranty Inspection:
1. Representatives of the Designer, Owner, the General Contractor, the Roofing Contractor and Roofing Manufacturer's representative shall make inspections of the roofing system toward the end of one (1) year warranty period and toward the end of the Roofing Contractor's guarantee period. The Roofing System Manufacturer's authorized technical representative shall inspect the roofing system near the end of the conclusion of the Manufacturer's Guarantee and report

same to Owner. The Roofing Contractor or Roofing Systems Manufacturer, as applicable, shall make approved repairs and/or replacements covered by the Guarantee. The project will not be accepted until the Roofing Contractor's Guarantee and the Roofing Manufacturer's Guarantee are both executed in strict accordance with the Contract Documents and data from Paragraph E below of these instructions, have been submitted and accepted by the Owner.

D. Contractor to provide two copies as built specifications, including all change orders. Shop drawings, as built drawings and details furnished to Owner in a 3-ring binder.

E. Owner shall receive ONE (1) WARRANTY from manufacturer of roof panels covering ALL of the following criteria. Multiple warranties are NOT acceptable.
1. Manufacturer's **20 year** limited watertight warranty.
2. 20 year material and finish coverage.
3. Warranty shall commence on date of substantial completion.
4. Shall include all sheet metal flashing.
5. Installer shall provide manufacturer with 5 year warranty covering roofing system installation and water tightness.

F. Contractor to provide two copies as built specifications, including all change orders. Shop drawings, as built drawings and details furnished to Owner in a 3-ring binder.

1.10 MANUFACTURER QUALITY ASSURANCE

A. Provide manufacturer’s representative to inspect project 1 day per week with inspection reports to Contractor and Architect within 3 days.

B. Inspection Reports will indicate compliance with Warranty, IBC, and Specification requirements and note any deviations needing correction.

PART 2 PRODUCTS

2.0 PRODUCTS

A. METAL ROOFING SYSTEM:
1. Whenever a particular make of material, trade name and/or manufacturer's name is specified herein, it shall be regarded as being indicative of the minimum standard of quality required. A bidder who proposes to quote on the basis of an alternate material and/or system will only be considered if the proposed alternate is submitted on time and is documented as being equivalent or superior in quality to the specified system as described in these specifications. Additionally, all manufacturer and contractor/fabricator guidelines must be met as specified.
2. Any proposed alternate systems must meet or exceed the following listed characteristics and be submitted for approval 10 days prior to bid opening. Additionally, all performance requirements listed in "Design Criteria" (Section 1.8) and Warranty Criteria (Section 1.9) must be met and submitted as well as all items listed in the Manufacturer's Qualifications (Section 1.4).

B. Panel material:

1. Sloped Metal Roofs: .032 aluminum, 16 inch panel.
2. Flashing and flat stock material: Fabricate in profiles indicated on drawings of same material, thickness, and finish as roof system, unless indicated otherwise.

C. Finish on surfaces:
1. Exposed surfaces for coated ALUMINUM:
   a. Two coat coil applied, baked-on full-strength (70% resin) fluorocarbon coating system (polyvinylidene fluoride, PVF2), applied by manufacturer's approved applicator.
   b. Coating system shall provide nominal 1.0 mil dry film thickness, consisting of primer and color coat.
   c. Coating shall be **STANDARD COLOR**, Kynar finish, as selected by Architect from **standard** color selections.
2. Unexposed surfaces for coated aluminum shall be baked-on polyester coating with .20 - .30 dry film thickness (TDF).
3. Color finish on all gutters, downspouts, trim and vertical fascia, to match color selected for standing seam roof system.

D. Characteristics:
1. Configuration: Standing seams incorporating mechanically interlocked, concealed anchor clips allowing unlimited thermal movement, and of configuration which will prevent entrance or passage of water.
   a. Panel/Cap configuration must have a total of four (4) layers of metal surrounding anchor clip for prevention of water infiltration and increased system strength designed to limit potential for panel blow-off.
   b. Profile of panel shall have mesa's every 1/2" o.c. continuous throughout panel which are a minimum of 1.5" wide. These will absorb thermal stresses, reduce oil canning in panel and increase load carrying capacity.
   c. Exposed fasteners, screws and/or roof mastic are unacceptable and will be rejected. System configuration only allows for exposed fasteners at trim details (as per manufacturer's guidelines)
   d. Panels must be furnished in continuous lengths from ridge to eave with no overlaps.
2. Seam must be 2- 3/8" minimum height for added upward pressures and aesthetic appeal. Seam shall have continuous anchor reveals to allow anchor clips to resist positive and negative loading and allow unlimited expansion and contraction of panels due to thermal changes. Integral (not mechanically sealed) seams are not acceptable.
3. Concealed Anchor Clips: Clips must be 16 gauge, 40,000 p.s.i. galvanized steel clip with projecting legs for additional panel alignment and provision for unlimited thermal movement in each direction along the longitudinal dimension.

   a. Clip design must isolate sealant in panel cap from clip to insure that no sealant damage occurs from the clip during expansion and contraction.
   b. Clip must maintain a clearance of a minimum of 3/8" between panel and substrate for proper ventilation to help prevent condensation on underside of panel and eliminate the contact of panel fastener head to panel.

4. Seam cap: Snap-on cap shall be a minimum of continuous length up to 45 feet according to job condition and field seamed by means of manufacturer's standard seaming machine.
    a. Cap shall be designed to receive continuous double bead of hot applied, foamed in place gasketing sealant which will not come in contact with the anchor clip to allow unlimited thermal movement of panel without damage to cap sealant.
    b. Sealant shall be non-fatigue, nitrogen injected water barrier.
5. Standing Seam Panel Width: 16"
6. Stiffening ribs: Located in flat of panel to minimize oil canning and telegraphing of structural members.
7. Panel length: Full length without joints, including bends.
8. Replaceability: Panels shall be of a symmetrical design with snap-on cap configuration such that individual panels may be removable for replacement without removing adjacent panels.
9. Panel ends shall be panned at ridge, headwall, and hip conditions where applicable.

E. Accessories:
1. Gable anchor clips: Standing Seam and Batten Seam styles aluminum alloy 6061-T6 minimum thickness .090".
2. Fasteners:
    a. Concealed fasteners: Corrosion resistant steel screws designed to meet structural loading requirements. The normal minimum screw size shall be #14.
    b. Exposed fasteners: Corrosion resistant steel screws (cadmium or zinc coatings are not acceptable) of R-MER SPAN series stainless steel with neoprene sealing washer, or 3/16" diameter waterproof rivets.

3. Closures: Factory pre-cut closed cell foam meeting ASTM D3575-93 a cross-linked closed cell polyolefin foam , enclosed in metal channel matching panels when used at hip and ridge.
4. Tape Gasketing: Non-curing modified isobutylene tri-polymer tape of thickness to fully adhere to both surfaces being joined with indicated service life of 20 years.
5. Provide all miscellaneous accessories for complete installation.

F. Manufacturers:
1. Merchant & Evans
2. The Garland Company, Inc
3. Imetco
4. Fabral
5. Morin
6. Substitutions: Under provisions of Section 01600.

2.1 ACCESSORY PRODUCTS:

A. Sealant:
1. Acceptable product:

a. Concealed Application : PT1-707 or Bostik Chem-Calk butyl sealant.
b. Exposed Application : General Electric Co., SILGLAZE II 2800. Colors: As selected by architect from sealant manufacturer's standard selection.

2.2 FABRICATION:

A. Shop fabricate metal roofing and flashing components to the maximum extent possible, forming metal work with clear, sharp, straight, and uniform bends and rises. Hem exposed edges of flashings.

B. Form flashing components from full single width sheet in minimum 10'-0" sections. Provide mitered corners, joined using closed end pop rivets and joint sealant.

C. Fabricate roofing and related sheet metal work in accord with approved shop drawings and applicable standards.

PART 3 EXECUTION

3.0 EXECUTION

3.1 PREPARATION:

A. Inspection: Examine the alignment and placement of the building structure and substrate. Correct any objectionable warp, waves or buckles in the substrate before proceeding with installation of the preformed metal roofing. The installed roof panels will follow the contour of the structure and may appear irregular if not corrected.

B. Establish straight side and crosswise benchmarks.

C. Use proper size and length fastener for strength requirements. Approximately 5/16" is allowable for maximum fastener head size beneath the panel.

D. Rectangular Roofs shall be checked for square and straightness. Gable ends may not be straight; set a true line for the gable clips and flashing with string line.

E. Measure the roof lengthwise to confirm panel lengths, overhangs, coverage of flashings at eaves and ridges and verify clearances for thermal movement.

F. Pre-roofing conference: Prior to beginning metal roofing work, a pre-roofing conference shall be held to review work to be accomplished.
1. Contractor, metal roofing subcontractor, metal roofing system manufacturer's representative and all other subcontractors who have equipment penetrating roof or whose work involves access to roof shall be present.

3.2 ROOFING AND FLASHING INSTALLATION:

A. All details will be shown on manufacturer's shop drawings to successful bidder; install roofing and flashings in accordance with approved shop drawings and manufacturer's product data, within specified erection tolerances.

B. Sheathing: 5/8" CDX Plywood.

C. Continuous self-adhering membrane - W. R. Grace Ice & Water Shield

D. Bearing Plates; 3”x5” 16ga pre-punched, installed under each clip.

E. Install the 16 gauge one piece panel clips per Engineered Shop Drawings.

F. Installation of Roof Panels: Roof panels can be installed by starting from either end and working towards the opposite end. Due to the symmetrical design of the specified panel system, it is also acceptable to start from the middle of the roof and work toward each end.

1. A stainless steel pop rivet shall be secured through the anchor reveal of the panel leg and extend into the arms of the panel clip located at the ridge of the system. This is done at each arm of the clip along the ridge. The panel is then anchored at both sides of the clip.
   a. Capture all drilling debris during this operation with a rag or cloth placed on the panels at the drilling operation.
2. The seam caps are shipped with two rolls of factory applied hot melt sealant located inside the caps. To install the caps, hook one side of the cap over the panel edge and rotate over the opposite panel leg. For ease of installation, start at one end of the panel and work toward the opposite end.
3. Utilize a hand crimping tool to crimp the cap around the top of two adjacent panels
4. Caps shall then be permanently seamed with manufacturers mechanical seamer.

G. Isolate dissimilar metals and masonry or concrete from metals with bituminous coating. Use gasketed fasteners where required to prevent corrosive action between fastener, substrate, and panels.

H. Limit exposed fasteners to extent indicated on shop drawings. No exposed fasteners shall be installed in the roof panel (including eaves), valley, or ridge.

I. Anchorage shall allow for temperature expansion/contraction movement without stress or elongation of panels, clips, or anchors. Attach clips to structural substrate using fasteners of size and spacing as determined by manufacturer's design analysis to resist specified uplift and thermal movement forces.

J. Seal laps and joints in accordance with roofing system manufacturer's product data.

K. Coordinate flashing and sheet metal work to provide weather tight conditions at roof terminations. Fabricate and install in accordance with standards of SMACNA Manual.

L. Provide for temperature expansion/contraction movement of panels at roof penetrations and roof mounted equipment in accordance with system manufacturer's product data and design calculations.

M. Installed system shall be true to line and plane and free of dents, and physical defects with a minimum of oil canning.

N. Form joints in linear sheet metal to allow for 1/4" minimum expansion at 20'-0" o.c. maximum and 8'-0" from corners.

O. At joints in linear sheet metal items, set sheet metal items in two 1/4" beads of butyl sealant. Extend sealant over all metal surfaces. Mate components for positive seal. Allow no sealant to migrate onto exposed surfaces.

P. Remove damaged work and replace with new, undamaged components.

Q. Touch up exposed fasteners using paint furnished by roofing panel manufacturer and matching exposed panel surface finish.

R. Clean exposed surfaces of roofing and accessories after completion of installation. Leave in clean condition at date of substantial completion. Touch up minor abrasions and scratches in finish.

S. Miscellaneous Details
1. Conform to SMACNA details.
2. Flash all mechanical penetrations per drawings.
3. Mechanically lock cleats into seams.

END OF SECTION

SECTION 07620

SHEET METAL FLASHING AND TRIM

PART 1 GENERAL

1.01 SECTION INCLUDES

A. Coping cap, sill, gravel guard, fascia and other flashings and fabrications.

B. Counter flashings over bituminous, base flashings.

C. Counter flashings at roof mounted equipment and vent stacks.

D. Flush Panel Metal Soffits & Walls

1.02 RELATED SECTIONS

A. Section 07900 - Joint Sealers.

B. Section 07611 – Prefabricated Metal Roofing

C. Section 07550 – Modified Bitumen Roofing

1.03 REFERENCES

A. ASTM A525 - Steel Sheet, Zinc Coated, (Galvanized) by the Hot-Dip Process.

B. ASTM B32 - Solder Metal.

C. ASTM B209 - Aluminum and Alloy Sheet and Plate.

D. ASTM B486 - Paste Solder.

E. ASTM D226 - Asphalt-Saturated Organic Felt Used in Roofing and Waterproofing.

F. ASTM D4586 - Asphalt Roof Cement, Asbestos-Free.

G. ASTM E72 - 10 Standard Test Methods of Conducting Strength Tests of Panels for Building Construction

H. ASTM E-283 - Test Method for Rate of Air Leakage

I. ASTM E-330 - Standard Test Method for Structural Performance

J. ASTM E-331 - Standard Test Method for Water Penetration

K. FS O-F-506 - Flux, Soldering, Paste and Liquid.

L. NRCA (National Roofing Contractors Association) - Roofing Manual.

M. SMACNA - Architectural Sheet Metal Manual.

1.04 SUBMITTALS

A. Submit under provisions of Section 01300.

B. Shop Drawings: Indicate material profile, jointing pattern, jointing details, fastening methods, flashings, terminations, and installation details, all compliant with ANSI-SPRI ES-1.

C. Submit samples illustrating metal finish color, for prefinished parapet wall coping.

1.05 QUALITY ASSURANCE

A. Perform work in accordance with SMACNA, ANSI-SPRI ES-1, and NRCA standard details and requirements.

1.06 QUALIFICATIONS

A. Fabricator and Installer: Company specializing in sheet metal flashing work with three years documented experience.

1.07 DELIVERY, STORAGE, AND HANDLING

A. Deliver, store, protect and handle products to site under provisions of Section 01600.

B. Stack preformed and prefinished material to prevent twisting, bending, or abrasion, and to provide ventilation. Slope metal sheets to ensure drainage.

C. Prevent contact with materials which may cause discoloration or staining.

1.08 COORDINATION

A. Coordinate work under provisions of Section 01039.

PART 2 PRODUCTS

2.01 SHEET MATERIALS

A. Pre-Coated Aluminum: ASTM A446, Grade A, G90 zinc coating; minimum .040 mil aluminum, shop pre-coated with Kynar 500 coating of standard color to match roof, selected by Architect.

B. Counter Flashing, Pitch Pans: Pre-Coated 24 Ga, Galvanized Steel, Standard Color by Architect.

C. Stainless Steel: ASTM A666, Type 304, soft temper, .018 inch thick, smooth No. 4 finish.

D. All gauges shall be compliant with ANSI-SPRI ES-1.

E. Provide Copings, Pitch Pans, and Counter flashings per Manufacturer’s requirements and covered under the Manufacturer’s Water tightness Warranty.

F. Flush Panel Metal Soffits & Walls: **.032"** Aluminum pre-coated with Kynar 500 coating from **standard** colors to be selected by Architect.

Product: Merchant & Evans, Inc. - Super Flush-Lock Series 311 Concealed Clip Soffit & Wall Panel System, or approved equal.

2.02 ACCESSORIES

A. Fasteners: Stainless steel, with soft neoprene washers.

B. Underlayment: Nervastrol 300 or Grace Ice & Water Shield

C. Slip Sheet: Rosin sized building paper.

D. Primer: Zinc chromate or galvanized iron type.

E. Protective Backing Paint: Bituminous.

F. Sealant: Polyurethane type, specified in Section 07900.

G. Bedding Compound: Butyl type.

H. Plastic Cement: ASTM D4586, Type II.

I. Reglets: Type indicated on drawings galvanized steel.

J. Solder: ASTM B32; 50/50 type.

K. Flux: FS O-F-506.

2.03 FABRICATION

A. Form sections true to shape, accurate in size, square, and free from distortion or defects.

B. Fabricate cleats of same material as sheet, interlockable with sheet.

C. Form pieces in longest possible lengths.

D. Hem exposed edges on underside 1/2 inch; miter and seam corners.

E. Form material with standing seams, maximum 10'-0" o.c.

F. Fabricate corners from one piece with minimum 18 inch long legs; solder for rigidity, seal with sealant.

G. Fabricate vertical faces with bottom edge formed outward 1/4 inch and hemmed to form drip.

H. Fabricate flashings to allow toe to extend 4 inches over roofing gravel. Return and brake edges.

I. Fabricate radius coping in minimum 10’-0’’ lengths. Contractor shall fabricate radius coping from field templates prepared by coping manufacturer.

2.04 FINISH

A. Back paint concealed metal surfaces with protective backing paint to a minimum dry film thickness of 15 mil.

PART 3 EXECUTION

3.01 EXAMINATION

A. Verify roof openings, curbs, pipes, sleeves, ducts, or vents through roof are solidly set, reglets in place, and nailing strips located.

B. Verify roofing termination and base flashings are in place, sealed, and secure.

3.02 PREPARATION

A. Install starter and edge strips, and cleats before starting installation.

B. Install surface mounted reglets true to lines and levels. Seal top of reglets with sealant.

3.03 INSTALLATION

A. Conform to drawing details included in the SMACNA and NRCA manual.

B. Contractor shall provide expansion joints in all copings, gravel guards, etc. Spaced as recommended by SMACNA and NRCA Manual.

C. Insert flashings into reglets to form tight fit. Secure in place with lead or plastic wedges. Pack remaining spaces with lead wool. Seal flashings into reglets with sealant.

D. Secure flashings in place using concealed fasteners. Use exposed fasteners only where permitted.

E. Apply plastic cement compound between metal flashings and felt flashings.

F. Fit flashings tight in place. Make corners square, surfaces true and straight in planes, and lines accurate to profiles.

G. Seal metal joints watertight.

3.04 COPING

A. Provide solid substrate underneath coping, and continuous self-adhering membrane lapping minimum 2” below wood nailers.

B. Provide return hem for drips.

C. Provide continuous cleats for outside face attached into 2x lumber minimum using 1-1/4” annular nails at 6” oc. spacing.

D. Attach inside face 16” O.C. with minimum 1-1/4” sheet metal screws or expansion fasteners.

E. Where these requirements conflict with ANSI-SPRI ES-1, ANSI-SPRI ES-1 shall govern.

3.04 FIELD QUALITY CONTROL

A. Field inspection will be performed under provisions of Section 01400.

B. Inspection will involve surveillance of work during installation to ascertain compliance with specified requirements.

3.05 SCHEDULE

	Metal Type	Material	Color
A.	Metal Coping & Fascia	Pre-Coated .040" Aluminum	Standard Color by Architect
B.	Counter Flashing, Pitch Pans	Pre-Coated 24 Ga Galvanized Steel	Standard Color by Architect
C.	Concealed and Thru-Wall Flashing	24 Ga Stainless Steel	Mil Finish
D.	Flush Panel Metal Soffits & Walls	Pre-Coated .032" Aluminum	Standard Color by Architect

END OF SECTION

SECTION 07900

JOINT SEALERS

PART 1 GENERAL

1.1 SUMMARY

A. Section includes sealants and joint backing, precompressed foam sealers, and accessories.

B. Related Sections:
   1. Section 08410 – Metal Framing Storefront
   2. Section 09260 - Gypsum Board Assemblies: Acoustic sealant.

1.2 REFERENCES

A. ASTM International:
   1. ASTM C834 - Standard Specification for Latex Sealants.
   2. ASTM C919 - Standard Practice for Use of Sealants in Acoustical Applications.
   3. ASTM C920 - Standard Specification for Elastomeric Joint Sealants.
   4. ASTM C1193 - Standard Guide for Use of Joint Sealants.
   5. ASTM D1056 - Standard Specification for Flexible Cellular Materials-Sponge or Expanded Rubber.
   6. ASTM D1667 - Standard Specification for Flexible Cellular Materials-Vinyl Chloride Polymers and Copolymers (Closed-Cell Foam).
   7. ASTM D2628 - Standard Specification for Preformed Polychloroprene Elastomeric Joint Seals for Concrete Pavements.

1.3 SUBMITTALS

A. Section 01330 - Submittal Procedures: Submittal procedures.

B. Products Data: Submit data indicating sealant chemical characteristics, performance criteria, substrate preparation, limitations, and color availability.

C. Samples: Submit two samples, 3 inch long in size illustrating sealant colors for selection.

D. Manufacturer's Installation Instructions: Submit special procedures, surface preparation, and perimeter conditions requiring special attention.

E. Warranty: Include coverage for installed sealants and accessories failing to achieve seal, watertight seal, exhibit loss of adhesion or cohesion, and sealants which do not cure.

1.4 QUALIFICATIONS

A. Manufacturer: Company specializing in manufacturing products specified in this section with minimum three years documented experience.

B. Applicator: Company specializing in performing Work of this section with minimum three years documented experience, and approved by manufacturer.

1.5 ENVIRONMENTAL REQUIREMENTS

A. Section 01600 - Products Requirements.

B. Maintain temperature and humidity recommended by sealant manufacturer during and after installation.

1.6 COORDINATION

A. Section 01300 - Administrative Requirements: Coordination and project conditions.

B. Coordinate Work with sections referencing this section.

PART 2 PRODUCTS

2.1 JOINT SEALERS

A. Manufacturers:
1. Dow Corning Corp., or equal.
2. Pecora, or equal.
3. GE, or equal.

B. Products Description:
1. High Performance General Purpose Exterior (Nontraffic) Sealant (Sealant): Silicone; ASTM C920, Grade NS, Class 25, Uses M, G, and A; single component.
   a. Type: 790 manufactured by Dow.
   b. Type: 865 manufactured by Pecora.
   c. Color: Colors as selected.
   d. Applications: Use for:
      1) Control, expansion, and soft joints in masonry.
      2) Joints between concrete and other materials.
      3) Joints between metal frames and other materials.
      4) Other exterior nontraffic joints for which no other sealant is indicated.
2. General Purpose Traffic Bearing Sealant (Sealant): Polyurethane ASTM C920, Grade NS, Class 25, Use T; multi- component.
   a. Type: Dynatread manufactured by Pecora.
   b. Color: Standard colors matching finished surfaces.
   c. Applications: Use for exterior and interior pedestrian and vehicular traffic bearing joints.
3. General Purpose Interior Sealant (Sealant): Acrylic emulsion latex; ASTM C834, single component, paintable.
   a. Color: Colors as selected.

b. Applications: Use for interior wall and ceiling control joints, joints between door and window frames and wall surfaces, and other interior joints for which no other type of sealant is indicated.:

4. Bathtub/Tile Sealant (Sealant): White silicone; ASTM C920, Uses M and A; single component, mildew resistant.
   a. Applications: Use for joints between plumbing fixtures and floor and wall surfaces, and joints between bathroom toilet room counter tops and wall surfaces.
5. Acoustical Sealant (Sealant): Butyl or acrylic sealant; ASTM C920, Grade NS, Class 12-1/2, Uses M and A; single component, solvent release curing, non-skinning.
   a. Applications: Use for concealed locations only at acoustically rated construction.
      1) Provide sealant bead between top stud runner and structure and between bottom stud track and floor.

2.2 ACCESSORIES

A. Primer: Non-staining type, recommended by sealant manufacturer to suit application.

B. Joint Cleaner: Non-corrosive and non-staining type, recommended by sealant manufacturer; compatible with joint forming materials.

C. Joint Backing: Round foam rod compatible with sealant; D1667, closed cell PVC; oversized 30 to 50 percent larger than joint width.

D. Bond Breaker: Pressure sensitive tape recommended by sealant manufacturer to suit application.

PART 3 EXECUTION

3.1 EXAMINATION

A. Section 01300 - Administrative Requirements: Coordination and project conditions.

B. Verify substrate surfaces and joint openings are ready to receive work.

C. Verify joint backing and release tapes are compatible with sealant.

3.2 PREPARATION

A. Remove loose materials and foreign matter impairing adhesion of sealant.

B. Clean and prime joints.

C. Perform preparation in accordance with ASTM C1193.

D. Protect elements surrounding Work of this section from damage or disfiguration.

3.3 INSTALLATION

A. Perform installation in accordance with ASTM C1193.

B. Perform acoustical sealant application work in accordance with ASTM C919.

C. Measure joint dimensions and size joint backers to achieve width-to-depth ratio, neck dimension, and surface bond area as recommended by manufacturer, except where specific dimensions are indicated.

D. Install bond breaker where joint backing is not used.

E. Install sealant free of air pockets, foreign embedded matter, ridges, and sags.

F. Apply sealant within recommended application temperature ranges. Consult manufacturer when sealant cannot be applied within these temperature ranges.

G. Tool joints concave.

H. Precompressed Foam Sealant: Do not stretch; avoid joints except at corners, ends, and intersections; install with face 1/8 to 1/4 inch below adjoining surface.

I. Compression Gaskets: Avoid joints except at ends, corners, and intersections; seal joints with adhesive; install with face 1/8 to 1/4 inch below adjoining surface.

3.4 CLEANING

A. Section 01700 - Execution Requirements: Final cleaning.

B. Clean adjacent soiled surfaces.

3.5 PROTECTION OF INSTALLED CONSTRUCTION

A. Section 01700 - Execution Requirements: Protecting installed construction.

B. Protect sealants until cured.

END OF SECTION

DIVISION 8

DOORS AND WINDOWS

SECTION 08114

STANDARD STEEL DOORS

PART 1 GENERAL

1.1 SUMMARY

A. Section includes non-rated, fire rated, and thermally insulated steel doors and door louvers.

B. Related Sections:
1. Section 08115 - Standard Steel Frames.
2. Section 08710 - Door Hardware.
3. Section 08800 - Glazing: Glass for doors.
4. Section 09900 - Paints and Coatings: Field painting of doors.

1.2 REFERENCES

A. American National Standards Institute:
1. ANSI A250.8 - Recommended Specifications for Standard Steel Doors and Frames.

B. ASTM International:
1. ASTM A653/A653M - Standard Specification for Steel Sheet, Zinc-Coated (Galvanized) or Zinc-Iron Alloy-Coated (Galvannealed) by the Hot-Dip Process.
2. ASTM C1363 - Standard Test Method for the Thermal Performance of Building Assemblies by Means of a Hot Box Apparatus.
3. ASTM E413 - Standard Classification for Rating Sound Insulation.

C. Hollow Metal Manufacturers Association:
1. HMMA 810 - Hollow Metal Doors.

D. National Fire Protection Association:
1. NFPA 80 - Standard for Fire Doors, Fire Windows.
2. NFPA 252 - Standard Methods of Fire Tests of Door Assemblies.

E. Steel Door Institute:
1. SDI 108 - Recommended Selection and Usage Guide for Standard Steel Doors.

F. Underwriters Laboratories Inc.:
1. UL 10B - Fire Tests of Door Assemblies.

G. Uniform Building Code:
1. UBC Standard 7-2 - Fire Tests of Door Assemblies.

1.3 SUBMITTALS

A. Section 01330 - Submittal Procedures: Requirements for submittals.

B. Shop Drawings: Indicate door elevations, internal reinforcement, closure method, and cut-outs for glazing, louvers, and finishes.

C. Product Data: Submit door configurations, location of cut-outs for hardware reinforcement.

D. Samples: Submit two samples of door face metal, inch in size illustrating shop finish colors and surface texture.

E. Manufacturer's Installation Instructions: Submit special installation instructions.

F. Manufacturer's Certificate: Certify Products meet or exceed specified requirements.

1.4 QUALITY ASSURANCE

A. Perform Work in accordance with State Municipality of Highways Public Work's standard.

B. Perform Work in accordance with ANSI A250.8.

C. Fire Rated Door Construction: Conform to NFPA 252 UL 10B UBC Standard 7-2.

D. Fire Rated Door Construction: Rate of rise of 250 450 650 degrees F across door thickness for stairs.

E. Installed Door Assembly: Conform to NFPA 80 for fire rated class.

F. Maintain one copy copies of each document on site.

1.5 QUALIFICATIONS

A. Manufacturer: Company specializing in manufacturing Products specified in this section with minimum three years documented experience.

B. Installer: Company specializing in performing work of this section with minimum 3 years documented experience and approved by manufacturer.

1.6 DELIVERY, STORAGE, AND HANDLING

A. Section 01600 - Product Requirements: Requirements for transporting, handling, storing, and protecting products.

B. Accept doors on site in manufacturer's packaging. Inspect for damage.

C. Break seal on site to permit ventilation.

1.7 COORDINATION

A. Section 01300 - Administrative Requirements: Requirements for coordination.

B. Coordinate Work with door opening construction, doorframe, and door hardware installation.

C. Coordinate installation to accommodate door hardware electric wire connections.

PART 2 PRODUCTS

2.1 STANDARD STEEL DOORS

A. Manufacturers:
   1. Ceco Door/Assa Abloy, or equal.
   2. Republic, or equal.
   3. Steelcraft, or equal
   4. Amweld International, or equal.
   5. Hollow Metal Express.
   6. Metal Products, Inc.
   7. Substitutions: Section 01600 - Product Requirements

B. Product Description:
   1. Exterior Doors (Insulated): ANSI A250.8, SDI 108, 1-3/4 inch thick.
      a. Level 3 - Extra heavy Duty, Model 2, seamless design.
   2. Interior Doors (Non-Rated): ANSI A250.8, SDI 108, 1-3/4 inch thick.
      a. Level 3 - Extra heavy Duty, Model 2, seamless design.
   3. Interior Doors (Fire Rated): ANSI A250.8, SDI 108, 1-3/4 inch thick.
      a. Level 3 - Extra heavy Duty, Model 2, seamless design.
   4. Interior Doors (Non-Rated): ANSI A250.8, SDI 108, 1-3/8 inch thick.
      a. Level 1 - Standard Duty, Model 2, seamless design.

2.2 COMPONENTS

A. Face: Steel sheet in accordance with ANSI A250. SDI 108.

B. End Closure: Channel, 0.04 inches thick, flush.

C. Core: Polyurethane.

D. Thermal Insulated Door: Total insulation R-Value of 4, measured in accordance with ASTM C1363.

E. Sound Rated Door: STC of 26, measured in accordance with ASTM E413.

2.3 ACCESSORIES

A. Louvers:

1. Material and Finish: Roll formed steel, prime painted.
2. Louver Blade: Inverted slat blade, sight proof.
3. Louver Free Area: 50 percent.
4. Frame: style with tamper proof fasteners.

B. Removable Stops: Rolled steel, channel shape, mitered corners; prepared for countersink style tamper proof screws.

C. Astragals for Double Doors: Aluminum, Z shaped, specifically for double doors.

D. Primer: ANSI A250.10 rust inhibitive type.

2.4 FABRICATION

A. Fabricate doors with hardware reinforcement welded in place.

B. Attach astragal to inactive leaf of pairs of fire rated doors.

C. Attach fire-rating label to each fire rated door.

D. Configure exterior doors with edge profile to receive recessed weatherstripping.

2.5 SHOP FINISHING

A. Steel Sheet: Galvanized to ASTM A653/A653M G90 (exterior doors).

B. Primer: Air-dried. (interior doors).

C. Shop Finish: Baked enamel.

PART 3 EXECUTION

3.1 EXAMINATION

A. Section 01300 - Administrative Requirements: Verification of existing conditions before starting work.

B. Verify opening sizes and tolerances are acceptable.

3.2 INSTALLATION

A. Install doors in accordance with ANSI A250.8.

B. Install door louvers, plumb and level.

C. Coordinate installation of glass and glazing specified in Section 08800.

D. Coordinate installation of doors with installation of frames specified in Section 08115 and hardware specified in Section 08710.

E. Touch-up damaged shop finishes.

3.3 ERECTION TOLERANCES

A. Section 01400 - Quality Requirements: Tolerances.

B. Maximum Diagonal Distortion: 1/16 inch measured with straight edge, corner to corner.

3.4 ADJUSTING

A. Section 01700 - Execution Requirements: Requirements for adjusting.

B. Adjust door for smooth and balanced door movement.

END OF SECTION

SECTION 08115

STANDARD STEEL FRAMES

PART 1 GENERAL

1.1 SUMMARY

A. Section includes fire rated and non-rated steel frames.
   1. Provide frames for interior and exterior glazed lights.

B. Related Sections:
   1. Section 03300 - Cast-In-Place Concrete: Placement of anchors into masonry wall construction.
   2. Section 04810 - Unit Masonry Assemblies: Masonry grout fill of metal frames and placement of anchors into masonry wall construction.
   3. Section 08114 - Standard Steel Doors.
   4. Section 08710 - Door Hardware: Hardware.
   5. Section 08800 - Glazing.
   6. Section 09900 – Paintings and Coatings: Field painting of doors.

1.2 REFERENCES

A. American National Standards Institute:
   1. ANSI A250.8 - Recommended Specifications for Standard Steel Doors and Frames.

B. ASTM International:
   1. ASTM A591/A591M - Standard Specification for Steel Sheet, Electrolytic Zinc-Coated, for Light Coating Mass Applications.
   2. ASTM A653/A653M - Standard Specification for Steel Sheet, Zinc-Coated (Galvanized) or Zinc-Iron Alloy-Coated (Galvannealed) by the Hot-Dip Process.

C. National Fire Protection Association:
   1. NFPA 80 - Standard for Fire Doors, Fire Windows.
   2. NFPA 252 - Standard Methods of Fire Tests of Door Assemblies.

D. Underwriters Laboratories Inc.:
   1. UL 10B - Fire Tests of Door Assemblies.

E. Uniform Building Code:
   1. UBC Standard 7-2 - Fire Tests of Door Assemblies.

1.3 SUBMITTALS

A. Section 01330 - Submittal Procedures: Submittal procedures.

B. Shop Drawings: Indicate frame elevations, reinforcement, anchor types and spacing, location of cut-outs for hardware, and finish.

C. Product Data: Submit frame configuration and finishes.

D. Samples: Submit two samples of frame, 6 x 6 inch in size illustrating factory finished frame colors and surface texture.

E. Manufacturer's Installation Instructions: Submit special installation instructions.

F. Manufacturer's Certificate: Certify products meet or exceed specified requirements.

1.4 QUALITY ASSURANCE

A. Conform to requirements of ANSI A250.8.

B. Fire Rated Frame Construction: Conform to NFPA 252 UL 10B UBC Standard 7-2.

C. Installed Frame Assembly: Conform to NFPA 80 for fire rated class same as fire door.

1.5 QUALIFICATIONS

A. Manufacturer: Company specializing in manufacturing products specified in this section with minimum three years documented experience.

1.6 DELIVERY, STORAGE, AND HANDLING

A. Section 01600 - Product Requirements: Product storage and handling requirements.

B. Accept frames on site in manufacturer's packaging. Inspect for damage.

C. Break seal on-site to permit ventilation.

1.7 COORDINATION

A. Section 01300 - Administrative Requirements: Coordination and project conditions.

B. Coordinate Work with frame opening construction, door, and hardware installation.

C. Sequence installation to accommodate required door hardware electric wire connections.

PART 2 PRODUCTS

2.1 STANDARD STEEL FRAMES

A. Manufacturers:
1. Ceco Door/Assa Abloy, or equal.
2. Republic, or equal.
3. Steelcraft, or equal
4. Amweld International, or equal.
5. Hollow Metal Express.
6. Metal Products, Inc.
7. Substitutions: Section 01600 - Product Requirements

B. Product Description: Standard shop fabricated steel frames, fire rated and non-rated types.
1. Exterior Frames:
a. Level 3 for Door Model 2, nominal 14 gage thick material, base metal thickness.
2. Interior Frames:
a. Level 3 for Door Model 2, nominal 16 gage thick material, base metal thickness.

2.2 ACCESSORIES

A. Bituminous Coating: Non-asbestos fibered asphalt emulsion.

B. Primer: ANSI A250.10 rust inhibitive type.

C. Silencers: Resilient rubber fitted into drilled hole.

D. Weatherstripping: Specified in Section 08710.

2.3 FABRICATION

A. Fabricate frames as welded unit.

B. Mullions for Double Doors: Fixed type, of same profiles as jambs.

C. Transom Bars for Glazed Lights: Fixed type, of same profiles as jamb and head.

D. Fabricate frames with hardware reinforcement plates welded in place. Provide mortar guard boxes.

E. Reinforce frames wider than 48 inches with roll formed steel channels fitted tightly into frame head, flush with top.

F. Prepare frames for silencers. Provide three single silencers for single doors and mullions of double doors on strike side. Provide two single silencers on frame head at double doors without mullions.

G. Configure exterior frames with special profile to receive recessed weatherstripping.

H. Attach fire rated label to each fire rated frame.

I. Fabricate frames to suit masonry wall coursing with 4 inch head member.

J. Reinforce all hollow metal frames to receive continuous hinge.

2.4 SHOP FINISHING

A. Steel Sheet: Galvanized to ASTM A653/A653M G90 (exterior frames).

B. Primer: Air dried (interior frames).

C. Coat inside of frame profile with bituminous coating to minimum thickness of 1/16 inch.

PART 3 EXECUTION

3.1 EXAMINATION

A. Section 01300 - Administrative Requirements: Coordination and project conditions.

B. Verify opening sizes and tolerances are acceptable.

3.2 INSTALLATION

A. Install frames in accordance with ANSI A250.8.

B. Coordinate with masonry and gypsum board wall construction for anchor placement.

C. Coordinate installation of glass and glazing specified in Section 08800.

D. Coordinate installation of frames with installation of hardware specified in Section 08710 and doors in Section 08114 and 08212.

E. Install roll formed steel reinforcement channels between two abutting frames. Anchor to structure and floor.

3.3 ERECTION TOLERANCES

A. Section 01400 - Quality Requirements: Tolerances.

B. Maximum Diagonal Distortion: 1/16 inch measured with straight edges, crossed corner to corner.

END OF SECTION

SECTION 08310

ACCESS DOORS/PANELS

PART 1: GENERAL

1.1 SUMMARY

SECTION 08310 includes access panels for the following types of installations:

A. Ceiling access panels

1.2 RELATED SECTIONS:

Applicable related specification sections:

A. Section 06114 - Wood Blocking and Curbing.

B. Section 08710 - Door Hardware for mortise cylinder lock.

1.3 SUBMITTALS

A. General: In accordance with conditions of Division 1 specifications

B. Manufacturer’s submittals documents and installation instructions.

1.4 QUALITY ASSURANCE

A. Provide all access panels for the project by the same manufacturer.

B. So there shall be no division of responsibility, all access panels shall be supplied by a single manufacturer under a single contract.

C. Obtain design professional’s approval for all panel sizes that vary from the general dimensions listed in these specifications, if they are not in accordance with manufacturer’s standards.

1.5 COORDINATION & RESPONSIBILITY FOR ACCESS PANELS ON SITE

A. Determine specific locations and sizes for access panels needed to gain access to concealed equipment & indicate on schedule specified under “submittals” article.

B. Access panels to gain access to equipment specified in Division 15 & 16 and where panels are not shown on drawings are to be provided by the applicable subcontractor and in compliance with requirements listed in these sections.

1.6 DELIVERY, STORAGE AND HANDLING

A. Package and ship in manufacturer’s original, unopened containers and packaging, with

labels clearly identifying product name and manufacturer.

B. Store indoors in a dry area out of direct sunlight in compliance to manufacturer's instructions.

C. Protect materials and finishes from damage during handling and installation.

PART 2: PRODUCTS

2.1 MANUFACTURER / DISTRIBUTOR

Bauco Access Panel Solutions Inc.
834 Devonshire Road, Victoria, BC, V9A 4T4 Canada Toll-Free Tel: 1-877-592-0033 or 1-250-592-0033
Toll-Free Fax: 1-877-592-plus (7587) or 1-250-595-0513
info@accesspanelsolutions.com www.accesspanelsolutions.com

2.2 GENERAL PURPOSE ACCESS PANELS:

A. baucoplus-II series: Non-rated recessed access doors with concealed hardware and gypsum board inlay for flush installation.

B. Material Overview: Extruded aluminum alloy 6063-T6 frames and supports complete with 5/8" (15.9 mm) or 1/2" (12.7 mm) moisture and mold resistant gypsum board inlay and galvanized internal steel corner reinforcing. Zinc-plated hardened steel screws, free pivot hinge, safety cable with carabineer hook, vinyl screw caps, and EPDM rubber gaskets.

C. Door: Fabricate using 2.8 mm thick extruded aluminum alloy 6063-T6 frame, screwed in place gypsum board inlay complete with galvanized internal steel corner reinforcing. Exposed top edge of frames shall have a concave meniscus rise to 0.5mm thick to accept finishing compound allowing a near invisible flush frame finish.

D. Frame: Recessed aluminum frame shall provide an edge similar to drywall bead against which the ceiling or wall surface shall be finished allowing a near invisible flush frame finish. Fabricate using 2.8mm thick extruded aluminum alloy 6063-T6 frame, complete with galvanized internal steel corner reinforcing. Frame opening complete with perimeter EPDM gasket maintaining the STC of gypsum board assembly.

E. Board: Access Panel inlay shall equal the wall & ceiling specifications to ensure acoustic integrity.

F. Hinge Detail: Concealed, galvanized steel free pivot hinge shall allow all doors to open 120 degrees. All access panel doors shall be fully removable and complete with a safety cable to secure doors to panel frames with a safety cable, test rated for 135lb (61kg), nylon coated, with crimp connections and spring snap aluminum carabiner.

G. Hinge Location: baucoplus-II panels for ceiling installation will be hinged on the longest side unless specified. When baucoplus-II panels are used in a wall installation, the hinges must be located on the floor side. The last 2 digits of the product code will always be the

hinge location, and always the horizontal measurement for a wall installation.

H. Latching/Locking devices: Concealed touch latch – standard

I. Finish: Door shall receive the same finish and paint as the surrounding surfaces. When installed and finished the access panel shall be completely flush with the wall or ceiling surface and only a one sixteenth of an inch shadow gap shall be visible.

J. Single Leaf Custom Doors: Minimum dimension of length or width is 6". Door sizes can be in increments of 1/8". Doors larger than 2300 square inches in size or with a length greater than 60" may need to be manufactured as multi leaf doors.

K. Multi Leaf Custom Doors: Multi leaf access panels shall be used to achieve a large clear opening. There are no cross bars required. Added to the end of the product code is a -2 for two leaves or -3 for three leaves.

L. Access Panel Sizing: baucoplus-II dimensions in model number refer to clear opening in door.

M. Framing: For a proper fit between framing members the rough framed opening will be 2 1/2" greater than product code sizing. This 2 1/2" allowance provides the door frame size 1 1/8" plus 1/8" allowance on all sides of the panel.

2.3 FABRICATION

A. Manufacture each access panel assembly as an integral unit ready for site installation.

B. Furnish number of latches required to hold door flush for a smooth uniform panel appearance when closed.

C. Larger sizes bracing will be added to add rigidity and/or prevent sagging.

D. Supply rear of panel door with acoustic treatment when specified.

E. Provide installation instructions with each panel.

F. Rear of panel door leaf label indicating product model and size

PART 3: EXECUTION

3.1 EXAMINATION

A. Examine areas to receive access doors. Notify Architect if areas are not acceptable. Do not begin installation until unacceptable conditions have been corrected.

3.2 PREPARATION

A. Advise installers of work relating to access panel installation including rough opening dimensions, locations of supports, and anchoring methods. Coordinate delivery with other work to avoid delay.

3.3 INSTALLATION

A. Follow manufacturer's instructions for installing access panels. Install access doors plumb, level, and square.

B. Anchor frames securely in place.

C. Set frames to proper alignment with the wall or ceiling.

D. Position access panels for proper access to concealed equipment requiring access.

3.4 ADJUST AND CLEAN

A. Adjust panel after installation for proper operation. Remove drywall compound from hinge, frame and door leaf edge. Clean the frame and door with a damp cloth.

B. Remove and replace panels or frames that are warped, bowed, or damaged.

END OF SECTION

SECTION 08410

ALUMINUM ENTRANCES & STOREFRONTS

PART 1 GENERAL

1.1 SUMMARY

A. Section includes exterior aluminum-framed storefronts including aluminum and glass doors and frames including hardware

B. Related Sections:
1. Section 07840 - Firestopping: Fire stop at system junction with structure.
2. Section 07900 - Joint Sealers: System perimeter sealant and back-up materials.
3. Section 08710 - Door Hardware: Hardware items other than specified in this section.
4. Section 08800 - Glazing.

1.2 REFERENCES

A. Aluminum Association:
1. AA DAF-45 - Designation System for Aluminum Finishes.

B. American Architectural Manufacturers Association:
1. AAMA 501 - Methods of Test for Exterior Walls.
2. AAMA 502 - Voluntary Specification for Field Testing of Windows and Sliding Glass Doors.
3. AAMA 503 - Voluntary Specification for Field Testing of Metal Storefronts. Curtain Wall and Sloped Glazing Systems.
4. AAMA 611 - Voluntary Specification for Anodized Architectural Aluminum.
5. AAMA 1503 - Voluntary Test Method for Thermal Transmittance and Condensation Resistance of Windows, Doors and Glazed Wall Sections.
6. AAMA 2603 - Voluntary Specification, Performance Requirements and Test Procedures for Pigmented Organic Coatings on Aluminum Extrusions and Panels.
7. AAMA 2604 - Voluntary specification, Performance Requirements and Test Procedures for High Performance Organic Coatings on Aluminum Extrusions and Panels.
8. AAMA 2605 - Voluntary Specification, Performance Requirements and Test Procedures for Superior Performing Organic Coatings on Aluminum Extrusions and Panels.
9. AAMA CW-10 - Care and Handling of Architectural Aluminum from Shop to Site.
10. AAMA MCWM-1 - Metal Curtain Wall Manual.
11. AAMA SFM-1 - Aluminum Store Front and Entrance Manual.

C. American Society of Civil Engineers:
1. ASCE 7 - Minimum Design Loads for Buildings and Other Structures.

D. American Society for Testing and Materials:
   1. ASTM A36/A36M - Standard Specification for Carbon Structural Steel.
   2. ASTM A123/A123M - Standard Specification for Zinc (Hot-Dip Galvanized) Coatings on Iron and Steel Products.
   3. ASTM A653/A653M - Standard Specification for Steel Sheet, Zinc-Coated (Galvanized) or Zinc-Iron Alloy-Coated (Galvannealed) by the Hot-Dip Process.
   4. ASTM B209 - Standard Specification for Aluminum and Aluminum-Alloy Sheet and Plate.
   5. ASTM B221 - Standard Specification for Aluminum and Aluminum-Alloy Extruded Bars, Rods, Wire, Profiles, and Tubes.
   6. ASTM E283 - Standard Test Method for Determining the Rate of Air Leakage Through Exterior Windows, Curtain Walls, and Doors Under Specified Pressure Differences Across the Specimen.
   7. ASTM E330 - Standard Test Method for Structural Performance of Exterior Windows, Curtain Walls, and Doors By Uniform Static Air Pressure Difference.
   8. ASTM E331 - Standard Test Method for Water Penetration of Exterior Windows, Curtain Walls, and Doors By Uniform Static Air Pressure Difference.
   9. ASTM E547 - Standard Test Method for Water Penetration of Exterior Windows, Curtain Walls, and Doors by Cyclic Static Air Pressure Differential.
   10. ASTM E1105 - Standard Test Method for Field Determination of Water Penetration of Installed Exterior Windows, Curtain Walls, and Doors by Uniform or Cyclic Static Air Pressure Difference.

E. National Fenestration Rating Council Incorporated:
   1. NFRC 100 - Procedures for Determining Fenestration Product U-Factors.

F. SSPC: The Society for Protective Coatings:
   1. SSPC Paint 20 - Zinc-Rich Primers (Type I - Inorganic and Type II - Organic).
   2. SSPC Paint 25 - Red Iron Oxide, Zinc Oxide, Raw Linseed Oil, and Alkyd Primer.

1.3 SYSTEM DESCRIPTION

A. Aluminum-framed storefront system includes tubular aluminum sections, aluminum and glass entrances, shop fabricated, factory finished, related flashings, anchorage and attachment devices.

B. System Assembly: Shop or site assembly.

1.4 PERFORMANCE REQUIREMENTS

A. General Performance: Aluminum-framed storefront system shall withstand the effects of the following performance requirements without exceeding performance criteria or failure due to defective manufacture, fabrication, installation, or other defects in construction:

1. Design Wind Loads: Determine design wind loads applicable to the Project from basic wind speed indicated in miles per hour, according to ASCE 7, Section 6.5, "Method 2-

Analytical Procedure," based on mean roof heights above grade indicated on Drawings. Verify with Structural Drawings.

B. System Design: Design and size components to withstand dead and live loads caused by positive and negative wind pressure acting normal to plane of wall, including building corners.

1. As calculated in accordance with applicable code, as measured in accordance with ASTM E330.
2. Wind loads: Provide storefront system; include anchorage, capable of withstanding wind load design pressures of 83 lbs./sq. ft. positive and -90 lbs./sq. ft. negative. The design pressures are based on the International Building Code; 2012 Edition.
3. Air Infiltration: The test specimen shall be tested in accordance with ASTM E 283. Air infiltration rate shall not exceed 0.06 cfm/ft^2 (0.3 l/s · m^2) at a static air pressure differential of 6.24 psf (300 Pa).
4. Water Resistance: The test specimen shall be tested in accordance with ASTM E 331. There shall be no leakage at a minimum static air pressure differential of 12 psf (575 Pa) as defined in AAMA 501.
5. Uniform Load: A static air design load of 65 psf (3112 Pa) shall be applied in the positive and negative direction in accordance with ASTM E 330. There shall be no deflection in excess of L/180 of the span of any framing member. At a structural test load equal to 1.5 times the specified design load, no glass breakage or permanent set in the framing members in excess of 0.4% of their clear spans shall occur.
6. Windborne-Debris-Impact-Resistance Performance: Shall be tested in accordance with ASTM E 1886 and information in ASTM E 1996 and /or AAMA 506.

b) Large-Missile Impact: For aluminum-framed systems located within 30 feet (9.1 m) of grade.
c) Small-Missile Impact: For aluminum-framed systems located more than 30 feet (9.1 m) above grade.

C. Bituminous air barrier and vapor retarder throughout assembly, primarily in line with inside pane of glass and heel bead of glazing compound.

D. Water Leakage: There shall be no leakage at a minimum static air pressure differential of 12 psf as defined in AAMA 501, tested in accordance with ASTM E331.

E. Thermal Transmittance of Assembly (Excluding Entrances): Maximum U Value of 0.69 Btu/sq ft per hour per deg F when measured in accordance with AAMA 1503.

F. Expansion / Contraction: Provide for expansion and contraction within system components caused by cycling temperature range of 170 degrees F over 12 hour period without causing detrimental effect to system components and anchorage.

G. System Internal Drainage: Drain water entering joints, condensation occurring in glazing channels, or migrating moisture occurring within system, to exterior by weep drainage network.

H. System Description (Exterior Doors)

1. Entrance Performance Requirements:

a. Wind loads: Provide immediate door framing for swing doors, including anchorage, capable of withstanding wind load design pressures of 83 lbs./sq. ft. positive and -90 lbs./sq. ft. negative These design pressures are based upon International Building Code -2012 Edition.

b. Air Infiltration: For single acting offset pivot, butt hung or continuous geared hinge entrances in the closed and locked position, the test specimen shall be tested in accordance with ASTM E 283 at a pressure differential of 1.57 psf for pairs of doors. A pair of 6'-0" x 7'-0" entrance doors and frame shall not exceed 1.2 cfm per square foot.

c. Structural: Corner strength shall be tested per the Kawneer dual moment load test procedure and certified by an independent testing laboratory to ensure weld compliance and corner integrity (Testing procedure and certified test results available upon request).

d. Uniform Load: A static air design load of 85 psf, (65psf for laminated infill) shall be applied in the positive and negative direction in accordance with ASTM E 330. There shall be no deflection in excess of L/180 of the span of any framing member. At a structural test load equal to 1.5 times the specified design load, no glass breakage shall occur.

e. Hurricane Resistance: Large Missile and small missile, tested in accordance with ASTME 1886/E1996 at a door opening of 8'-0"x8'-0".

f. Forced Entry: Tested in accordance with SFBC 3603.2 (b) (5).

1.5 SUBMITTALS

A. Section 01330 - Submittal Procedures: Submittal procedures.

B. Shop Drawings: Indicate system dimensions, framed opening requirements and tolerances, affected related Work and expansion and contraction joint location and details.

C. Product Data: Submit component dimensions, describe components within assembly, anchorage and fasteners, glass and infill, door hardware, and internal drainage details.

D. Samples: Submit two samples 12 x 12 inches in size illustrating finished aluminum surface.

E. Design Data: Indicate framing member structural and physical characteristics, calculations, dimensional limitations.

F. Manufacturer's Certificate: Certify products meet or exceed specified requirements.

1.6 QUALITY ASSURANCE

A. Perform Work in accordance with AAMA SFM-1 and AAMA MCWM-1 - Metal Curtain Wall, Window, Store Front and Entrance - Guide Specifications Manual.

B. Maintain one copy of each document on site.

1.7 QUALIFICATIONS

A. Manufacturer and Installer: Company specializing in manufacturing aluminum glazing systems with minimum three years experience, and with service facilities within 150 miles of Project.

B. Design structural support framing components under direct supervision of Professional Engineer experienced in design of this Work and licensed in State of Louisiana.

1.8 DELIVERY, STORAGE, AND PROTECTION

A. Section 01600 - Product Requirements: Product storage and handling requirements.

B. Handle Products of this section in accordance with AAMA MCWM-1 - Curtain Wall Manual #10.

C. Protect finished aluminum surfaces with wrapping strippable coating. Do not use adhesive papers or sprayed coatings which bond when exposed to sunlight or weather.

1.9 ENVIRONMENTAL REQUIREMENTS

A. Section 01600 - Product Requirements.

B. Do not install sealants nor glazing materials when ambient temperature is less than 40 degrees F during and 48 hours after installation.

1.10 COORDINATION

A. Section 01300 - Administrative Requirements: Coordination and project conditions.

B. Coordinate the Work with installation of wall components and materials.

1.11 WARRANTY

A. Section 01700 - Execution Requirements: Product warranties and product bonds.

B. Furnish five year manufacturer warranty for glazed units.

PART 2 PRODUCTS

2.1 ALUMINUM-FRAMED INTERIOR AND EXTERIOR STOREFRONTS

A. Manufacturers:
1. Kawneer Co., Inc.: IR501 Hurricane Resistant (basis of design)
2. Vistawall Architectural Products
3. EFCO
4. Substitutions: Section 01600 - Product Requirements

B. Product Description:
1. Aluminum Frame:Non-thermally broken; flush applied glazing stops.
2. Mullions: Profile of extruded aluminum cladding with internal reinforcement of aluminum or shaped steel structural section.

2.2 COMPONENTS

A. Extruded Aluminum: ASTM B221; 6063 alloy, T5 temper typical, 6061 alloy, T6 temper for extruded structural members.

B. Sheet Aluminum: ASTM B209, 5005 alloy, H15 or H34 temper.

C. Sheet Steel: ASTM A653/A653M; galvanized to minimum G90.

D. Steel Sections: ASTM A36/A36M; shaped to suit mullion sections, galvanized to G90.

E. Finish: Clear Anodized

F. Glass: Specified in Section 08800.

2.3 FABRICATION

A. Fabricate components with minimum clearances and shim spacing around perimeter of assembly, yet enabling installation and dynamic movement of perimeter seal.

B. Accurately fit and secure joints and corners. Make joints flush, hairline, and weatherproof.

C. Prepare components to receive anchor devices. Fabricate anchors.

D. Arrange fasteners and attachments to conceal from view.

E. Reinforce interior horizontal head rail to receive drapery blind track brackets and attachments.

F. Prepare components with internal reinforcement for door hardware.

G. Reinforce framing members for imposed loads.

2.4 SHOP FINISHING

A. Color Anodized Aluminum Surfaces: AAMA 611, AA-M12C22A44 non-specular as fabricated mechanical finish, medium matte chemical finish, and Architectural Class I 0.7 mils; clear anodized.

B. Concealed Steel Items: Galvanized in accordance with ASTM A123/A123M to thickness Grade 85, 2.0 oz/sq ft

C. Apply bituminous paint to concealed aluminum and steel surfaces in contact with cementitious or dissimilar metals.

D. Shop and Touch-Up Primer for Steel Components: SSPC Paint 25 red oxide.

E. Touch-Up Primer for Galvanized Steel Surfaces: SSPC Paint 20 zinc rich.

F. Extent of Finish:
   1. Apply factory coating to surfaces exposed at completed assemblies.
   2. Apply finish to surfaces cut during fabrication so no natural aluminum is visible in completed assemblies, including joint edges.
   3. Apply touch-up materials recommended by coating manufacturer for field application to cut ends and minor damage to factory applied finish.

PART 3 EXECUTION

3.1 EXAMINATION

A. Section 01300 - Administrative Requirements: Coordination and project conditions.

B. Verify dimensions, tolerances, and method of attachment with other Work.

C. Verify wall openings and adjoining air and vapor seal materials are ready to receive Work of this Section.

3.2 INSTALLATION

A. Install wall system in accordance with AAMA MCWM-1 - Metal Curtain Wall, Window, Store Front and Entrance - Guide Specifications Manual.

B. Attach to structure to permit sufficient adjustment to accommodate construction tolerances and other irregularities.

C. Provide alignment attachments and shims to permanently fasten system to building structure.

D. Align assembly plumb and level, free of warp or twist. Maintain assembly dimensional tolerances, aligning with adjacent Work.

E. Provide thermal isolation where components penetrate or disrupt building insulation.

F. Install sill flashings with full welded end dams. Set in full bed of sealant and seal to adjacent Work to form water tight dam.

G. Coordinate attachment and seal of perimeter air and vapor barrier materials.

H. Pack fibrous insulation in shim spaces at perimeter of assembly to maintain continuity of thermal barrier.

I. Install integral flashings and integral joint sealers.

J. Set thresholds in bed of mastic and secure.

K. Install hardware using templates provided. Refer to Section 08710 for installation requirements.

L. Install infill panels using method required to achieve performance criteria.

M. Coordinate installation of glass with Section 08800; separate glass from metal surfaces.

N. Coordinate installation of perimeter sealants with Section 07900.

3.3 ERECTION TOLERANCES

A. Section 01400 - Quality Requirements: Tolerances.

B. Maximum Variation from Plumb: 0.06 inches every 3 ft non-cumulative or 1/16 inches per 10 ft, whichever is less.

C. Maximum Misalignment of Two Adjoining Members Abutting in Plane: 1/32 inch.

3.4 FIELD QUALITY CONTROL

A. Section 01400 - Quality Requirements: Testing and Inspection Services 01700 - Execution Requirements: Testing, adjusting, and balancing.

B. Inspection to monitor quality of installation and glazing.

C. Test to AAMA 502 or 503 ASTM E1105. AAMA 501.

3.5 ADJUSTING

A. Section 01700 - Execution Requirements: Testing, adjusting and balancing.

B. Adjust operating hardware for smooth operation.

3.6 CLEANING

A. Section 01700 - Execution Requirements: Final cleaning.

B. Remove protective material from pre-finished aluminum surfaces.

C. Wash down surfaces with solution of mild detergent in warm water, applied with soft, clean wiping cloths. Take care to remove dirt from corners. Wipe surfaces clean.

D. Remove excess sealant by method acceptable to sealant manufacturer.

3.7 PROTECTION OF INSTALLED CONSTRUCTION

A. Section 01700 - Execution Requirements: Protecting installed construction.

B. Protect finished Work from damage.

3.8 SCHEDULES

A. Exterior Storefront Windows: Kawneer IR501 Hurricane Resistant (See plans & schedule)

END OF SECTION

SECTION 08710

DOOR HARDWARE

PART 1 GENERAL

1.01 SECTION INCLUDES

A. All items known commercially as Finish or Door Hardware.

B. Thresholds and Weatherstripping/Door Seals.

1.02 RELATED SECTIONS

A. Section 08100 – Steel Doors and Frames.

B. Section 08200 – Wood and Plastic Doors.

C. Section 08400 – Entrances and Storefronts.

1.03 REFERENCES

A. BHMA (Builders Hardware Manufacturers Association) A156 series.

B. ANSI/DHI A115.IG – 1994 Installation Guide for Doors and Hardware.

C. ANSI A250.6 – 1997 Recommended Practice for Hardware Reinforcing on Steel Doors and Frames.

D. NFPA – 80 – Fire Doors and Windows.

E. NFPA – 101-2000 - Life Safety Code.

F. ADA – Americans with Disabilities Act.

G. ANSI A250.13 – Wind Resistant Building Component Testing.

H. All Applicable Local and State Codes.

1.04 SUBMITTALS

A. Procedures of Division 1, Section 01330 – Submittal procedures apply to this section.

B. Product Data – Submit two (2) copies of manufacturer's catalog sheets describing each item of hardware to be supplied.

C. Schedules – Submit six (6) copies of hardware schedules for Architect's approval. Schedules are to include quantity, type, location, finish and manufacturer of each item of hardware for each opening. Schedule may be horizontal or vertical format. No material is

to be ordered until the submittal is approved. After approval, no substitutions will be allowed
without the written approval of the Architect.

D. Samples – If requested by the Architect, submit a sample of each hardware item in the design and finish to be used on the project. Samples may be used on the project provided they are undamaged during the submittal process.

E. Templates – Furnish template information to the General Contractor for use by other trades in fabricating related materials.

F. Project Closeout – On completion of the project, furnish one (1) copy of the "as furnished" hardware schedule along with one (1) copy each of the keying schedule. manufacturer's maintenance instructions and any special tools which may be required to maintain or adjust the hardware. In addition, furnish copies of all manufacturer's warranties for the owner's records.

1.05 QUALITY ASSURANCE

A. Manufacturers and model numbers listed in the hardware sets portion of this specification are for the purpose of establishing a standard of quality. Similar products by approved manufacturers that are equal in design, function and quality will be acceptable upon prior approval of the Architect provided the required physical samples and data are submitted in accordance with Section 01600.

B. Supplier: A recognized builders hardware supplier whose principal office and place of business is located within 150 miles of the project site, who has been furnishing hardware in the project's vicinity for a period of not less than five (5) years; and who is, or has in full time employment an Architectural Hardware Consultant (AHC) in good standing as certified by the American Society of Architectural Hardware Consultants, or equivalent, and who is a direct distributor of the products approved, for warranty purposes. This paragraph will be strictly enforced. All schedules shall be signed by an AHC.

The supplier must have demonstrated willingness to coordinate field problems, and (upon reasonable compensation) to assist the Owner in re-keying and service operations. He must have a reputation for supplying quality material. Pre-bid approval is required via addendum; the following are accorded such approval in advance:

1. Brabner & Hollon; Mobile, AL
2. Ladd Architectural Door; Mobile, AL
3. Mullins Building Products; Birmingham, AL
4. Rayford & Associates, Inc.; Mobile, AL
5. Mullins Building Products; Montgomery, AL
6. Kelley Bros. Hardware - Alabama, Inc., Daphne, AL

C. The hardware manufacturer shall be a recognized firm regularly engaged in the manufacture and sale of finished hardware items.

D. If required, the hardware supplier shall furnish certification and documentation that his materials meet all physical and environmental requirements of the project.

E. As near as possible, obtain each type of hardware (hinges, locks, closers, etc.) from a single manufacturer.

F. Provide hardware for fire rated openings that complies with the requirements of NFPA 80 and authorities having jurisdiction. Provide only items of door hardware that have been tested and listed by UL, FM, Warnock-Hersey or other testing organizations acceptable to the authorities having jurisdiction.

G. All hardware shall meet the requirements set forth in the Americans with Disabilities Act (ADA) and state and local handicapped codes.

1.06 DELIVERY, STORAGE AND PROTECTION

A. Section 01600 pertaining to transportation, handling and storage of project materials applies to this section.

B. Package each item individually. Label and clearly identify each package with item nomenclature and door opening. Correlate all making and opening numbers to match the hardware schedule.

C. The General Contractor is to provide a secure, locked storage area for all items delivered to the jobsite.

D. The General Contractor shall inventory all items delivered to the jobsite within forty-eight hours and advise the supplier immediately of any shortages.

1.07 PROJECT CONDITIONS

A. The General Contractor will coordinate the work between this supplier and other related sections such as hollow metal and wood door suppliers to insure proper manufacturer and fabrication of doors to receive the approved hardware.

1.08 WARRANTY

A. All hardware items are to be warranted for a period of one (1) year from date of substantial project completion. Door closers are to be warranted for five (5) years.

B. Warranty is to cover failure due to manufacturing defects or material failure only. It shall not cover abuse, vandalism, improper installation or maintenance. Defective materials are to be replaced at no cost to the owner.

PART 2 PRODUCTS

2.01 MANUFACTURERS

A. Acceptable products and their manufacturers are listed below. Specific information regarding functions, sizes, mounting and types is found in the hardware sets at the end of the section.

1. Hinges

	MFG'R	FINISH	TYPE/SERIES
a.	Stanley	26D/AL	AS SPECIFIED
b.	Hager	26D/AL	EQUAL
c.	McKinney	26D/AL	EQUAL
d.	Select	AL	SL-11HD

2. Exit Devices & Mullions

	MFG'R	FINISH	SERIES/DESIGN
a.	Stanley S828-970 Satin Stainless Steel Push Plate 3-1/2 x 15		

3. Locks, Latches and Dummy Trim

	MFG'R	FINISH	SERIES/DESIGN
a.	Best	626	93K-714D
b.	Schlage		
c.	Sargent		

4. Cylinders, Deadlocks & Misc. Locks

	MFG'R	FINISH	SERIES/DESIGN
a.	Best CORMAX	626	1E-72-PAT/1E-74-PAT
b.	Schlage		
c.	Sargent		

NO SUBSTITUTE

5. Closers

	MFG'R	FINISH	SERIES/DESIGN
a.	Stanley	689	D-4550 Series
b.	LCN	689	4000 Series
c.	Sargent	689	351 Series

6, Push/Pulls/Kickplates

	MFG'R	FINISH	TYPE/SERIES
a.	Rockwood	32DDMS	70F/107x70/K1050
b.	Hager	32DDMS	30S/33/190S
c.	Trimco	32DDMS	AS SPECIFIED

7. Overhead Stops

	MFG'R	FINISH	TYPE/SERIES
a.	Rockwood	32D	19000/14400 Series

b.	G-J	32D	90/450 Series
c.	ABH	32D	9000/4400 Series

8. Stops and Miscellaneous Items

	MFG'R	FINISH	ITEM
a.	Rockwood	32D	EQUAL
b.	Hager	32D	EQUAL
c.	Trimco	32D	AS SPECIFIED

9. Thresholds and Weatherstripping

	MFG'R	FINISH	TYPE/ITEM
a.	Pemko	AL	AS SPECIFIED
b.	Hager	AL	EQUAL
c.	National Guard	AL	EQUAL

B. Substitutions – Substitutions from the listed manufacturers and products without prior approval of the architect are not permitted. Suppliers desiring to bid products not listed must make written application to the architect no less than seven (7) working days prior to the bid date. Applications must be accompanied by manufacturers complete literature and/or samples to allow the Architect to make an informed decision. Verbal requests will not be considered. Approval of alternate manufacturers products will be by addendum at least two (2) days prior to bid date to insure an equitable competitive situation for all bidders.

2.02 MATERIALS AND FABRICATION

A. Base Metals – Produce hardware units of basic metal and forming method indicated using manufacturer's standard metal alloy, composition, temper and hardness, but in no case of lesser (commercially recognized) quality than specified for applicable hardware units for finish designations indicated.

B. Fasteners – Provide hardware manufactured to conform to published templates, generally prepared for machine screw installation. Do not provide hardware that has been prepared for self-tapping sheet metal screws, except as specifically indicated.

C. Furnish screws for installation with each hardware item. Provide Phillips flat-head screws except as otherwise indicated. Furnish exposed (exposed under any condition) screws to match hardware finish or if exposed in surfaces of other work, to match finish of this other work as closely as possible including "prepared for paint" surfaces to receive painted finish.

D. Provide concealed fasteners for hardware units that are exposed when door is closed except to the extent no standard units of type specified are available with concealed fasteners. Do not use thru-bolts for installation where bolt heads or nuts are exposed on opposite face unless their use is the only means of adequately securing the hardware or where required on labeled doors. In no case are

thru-bolts to be used as a substitute for proper reinforcement of doors or frames.

2.02.1 FINISHES

A. Finishes for all items are as listed in the hardware schedule at the end of this section.

B. Finish designations are as listed in ANSI/BHMA A156.18 "American Standards for Materials and Finishes: and are the industry recognized standard commercial finishes.

2.03 KEYING

A. Key all cylinders to Best CORMAX GMK system. Factory Rep shall meet with the owner's representative to determine exact keying requirements. Furnish keyed temporary (Construction) cores for each lock. Send permanent cores and keys direct from factory to Owner. Notify the Architect when permanent cores and keys are shipped. Return construction cores to distributor for credit.
Furnish keys and INSTALL TOOLS AS as follows:
6 Master Keys per new group
6 Construction Master Keys
4 Control Keys
3 Keys per cylinder
2 Core Install tools Best #ED211

PART 3 EXECUTION

3.01 INSTALLATION

A. Mount hardware units at heights indicated in following applicable publications, except as specifically indicated or required to comply with governing regulations and except as otherwise directed by architect.

1. "Recommended Locations for Builders Hardware for Standard Steel Doors and Frames" by the DOOR AND HARDWARE INSTITUTE.

a. WDMA Industry Standard I.S. 1.A-97, "Hardware Locations for Wood Flush Doors."

B. Install each hardware item in compliance with the manufacturer's instructions and recommendations. Where cutting and fitting is required to install hardware onto or into surfaces that are later to be painted or finished in another way, coordinate removal, storage, and reinstallation or application of surface protection with finishing work specified in the Division 9. Do not install surface-mounted items until finishes have been completed on the substrates involved.

C. Set units level, plumb, and true to line and location. Adjust and reinforce the attachment substrate as necessary for proper installation and operation.

D. Drill and countersink units that are not factory prepared for anchorage fasteners. Space fasteners and anchors in accordance with industry standards.

E. Set thresholds in sealant complying with requirements specified in Section 07100 – Dampproofing and Waterproofing.

F. Weatherstripping and Seals: Comply with manufacturer's instructions and recommendations to the extent installation requirements are not otherwise indicated.

3.02.1 AJUSTING AND CLEANING

A. Adjust and check each operating item of hardware and each door to ensure proper operation or function of every unit. Replace units that cannot be adjusted to operate freely and smoothly or as intended for the application made.

B. Where door hardware is installed more than one month prior to acceptance or occupancy of a space or area, return to the installation during the week prior to acceptance or occupancy and make final check and adjustment of all hardware items in such space or area. Clean operating items as necessary to restore proper functions and finish of hardware and doors. Adjust door control devices to compensate for final operation of heating and ventilating equipment.

C. Clean adjacent surfaces soiled by hardware applications.

3.03 HARDWARE SCHEDULE

A. Hardware Sets - Refer to drawings.

END OF SECTION

SECTION 08800

GLAZING

PART 1 GENERAL

1.1 SUMMARY

A. Section includes glass and glazing for metal-framed storefronts, doors, and curtain walls.
   1. Glass glazing materials and installation requirements are included in this section for other sections referencing this section.

B. Related Sections:
   1. Section 07900 - Joint Sealers: Sealant and back-up material other than glazing sealants.
   2. Section 08114 - Standard Steel Doors: Glazed doors.
   3. Section 08212 - Flush Wood Doors: Glazed doors.
   4. Section 08410 - Metal-Framed Storefronts.

1.2 REFERENCES

A. American National Standards Institute:
   1. ANSI Z97.1 - Safety Glazing Materials Used in Buildings Safety.

B. American Society of Civil Engineers:
   1. ASCE 7 - Minimum Design Loads for Buildings and Other Structures.

C. American Society for Testing and Materials:
   1. ASTM C570 - Standard Specification for Oil- and Resin-Base Caulking Compound for Building Construction.
   2. ASTM C669 - Standard Specification for Glazing Compounds for Back Bedding and Face Glazing of Metal Sash.
   3. ASTM C864 - Standard Specification for Dense Elastomeric Compression Seal Gaskets, Setting Blocks, and Spacers.
   4. ASTM C920 - Standard Specification for Elastomeric Joint Sealants.
   5. ASTM C1036 - Standard Specification for Flat Glass.
   6. ASTM C1048 - Standard Specification for Heat-Treated Flat Glass-Kind HS, Kind FT Coated and Uncoated Glass.
   7. ASTM C1172 - Standard Specification for Laminated Architectural Flat Glass.
   8. ASTM C1193 - Standard Guide for Use of Joint Sealants.
   9. ASTM D4802 - Standard Specification for Poly (Methyl Methacrylate) Acrylic Plastic Sheet.
   10. ASTM E90 - Standard Test Method for Laboratory Measurement of Airborne Sound Transmission Loss of Building Partitions and Elements.
   11. ASTM E330 - Standard Test Method for Structural Performance of Exterior Windows, Curtain Walls, and Doors By Uniform Static Air Pressure Difference.

12. ASTM E546 - Standard Test Method for Frost Point of Sealed Insulating Glass Units.
13. ASTM E576 - Standard Test Method for Frost Point of Sealed Insulating Glass Units in the Vertical Position.
14. ASTM E773 - Standard Test Methods for Seal Durability of Sealed Insulating Glass Units.
15. ASTM E774 - Standard Specification for Sealed Insulating Glass Units.
16. ASTM E1425 - Standard Practice for Determining the Acoustical Performance of Exterior Windows and Doors.

D. Glass Association of North America:
1. GANA - FGMA Sealant Manual.
2. GANA - Glazing Manual.
3. GANA - Laminated Glass Design Guide.

E. National Fire Protection Association:
1. NFPA 80 - Standard for Fire Doors, Fire Windows.

F. Underwriters Laboratories Inc.:
1. UL - Building Materials Directory.

1.3 PERFORMANCE REQUIREMENTS

A. Provide glass and glazing materials for continuity of building enclosure:
1. In conjunction with materials described in Section 07900.
2. To utilize inner pane of multiple pane sealed units for continuity of air barrier and vapor retarder seal.
3. To maintain continuous air barrier and vapor retarder throughout glazed assembly from glass pane to heel bead of glazing sealant.

B. Size glass to withstand dead loads and positive and negative live loads acting normal to plane of glass as calculated in accordance with applicable code as measured in accordance with ASTM E330.

C. Limit glass deflection to 1/200 or flexure limit of glass with full recovery of glazing materials, whichever is less.

D. All exterior glass shall be large and small missile impact rated.

1.4 SUBMITTALS

A. Section 01330 - Submittal Procedures: Submittal procedures.

B. Product Data:
1. Glass: Provide structural, physical and environmental characteristics, size limitations, and special handling or installation requirements.
2. Glazing Sealants, Compounds and Accessories: Provide chemical, functional, and environmental characteristics, limitations, special application requirements. Identify available colors where exposed.

C. Samples:
   1. Glass: Submit two samples 12 x 12 inch in size, illustrating each glass units, coloration and design.
   2. Glazing Materials: Submit 12-inch long bead of glazing sealant and gaskets, color as selected.

D. Certificates: Certify products meet or exceed specified requirements.

E. Manufacturer's Certificate: Certify sealed insulated glass, meets or exceeds specified requirements.

1.5 QUALITY ASSURANCE

A. Perform Work in accordance with GANA Glazing Manual, GANA Sealant Manual, GANA Laminated Glass Design Guide for glazing installation methods.

B. Maintain one copy of each document on site.

1.6 QUALIFICATIONS

A. Installer: Company specializing in performing Work of this section with minimum three years documented experience and approved by manufacturer.

1.7 PRE-INSTALLATION MEETING

A. Section 01300 - Administrative Requirements: Preinstallation meeting.

B. Convene minimum one week before starting Work of this section.

1.8 ENVIRONMENTAL REQUIREMENTS

A. Section 01600 - Product Requirements.

B. Do not install glazing when ambient temperature is less than 50 degrees F.

C. Maintain minimum ambient temperature before, during and 24 hours after installation of glazing compounds.

1.9 WARRANTY

A. Section 01700 - Execution Requirements: Product warranties and product bonds.

B. Furnish ten-year warranty to include coverage for sealed glass units from seal failure, interpane dusting or misting, and replacement of same.

C. Furnish ten-year warranty to include coverage for delamination of laminated glass and replacement of same.

PART 2 PRODUCTS

2.1 MANUFACTURERS

A. Manufacturers
   1. Guardian (basis of design)
   2. Viracon
   3. Arch Aluminum and Glass
   4. PPG
   5. Substitutions: Under provisions of Section 01600.

2.2 COMPONENTS

A. All sealed units to meet ASTM E774 and E773. Double pane with Butyl Primary Silicone Secondary Edge Seal. Interpane space purged dry hermetic air, total unit thickness of 1 inch with ½ inch air space. Interspace metal trim to be clear anodized finish.

B. Glass Types:
   Type 1: 1" insulated clear tempered glass with inner pane to be obscure texture.

   ***All exterior glass shall be large and small missile impact rated.**

2.2 ACCESSORIES

A. Elastomeric Glazing Sealants: Materials compatible with adjacent materials including glass, laminated glass core, insulating glass seals, and glazing channels.
   1. Silicone Glazing Sealant: ASTM C920, Type S, Grade NS, Class and Use suitable for glazing application indicated; single component; chemical curing; capable of water immersion without loss of properties; non-bleeding, non-staining, cured Shore A hardness of 15 to 25.
      a. Structural Silicone: Furnish high-modulus structural silicone glazing materials where sealant bonds glass to substrate.

B. Pre-Formed Glazing Tape: Size to suit application.
   1. Glazing Tape: Closed cell polyvinyl chloride foam, coiled on release paper over adhesive on two sides, maximum water absorption by volume of 2 percent, designed for compression of 25 percent to affect an air barrier and vapor retarder seal.
      a. Type: manufactured by

C. Setting Blocks: ASTM C864 Option I, Neoprene, 80 to 90 Shore A udometer hardness, length of 0.1 inch for each square foot of glazing or minimum 4 inch x width of glazing rabbet space minus 1/16 inch x height to suit glazing method and pane weight and area.

D. Spacer Shims: ASTM C864 Option I, Neoprene, 50 to 60 Shore A udometer hardness, minimum 3 inch long x one half the height of glazing stop x thickness to suit application, self adhesive on one face.

E. Glazing Clips: Manufacturer's standard type.
   1. Thickness: inch Manufacturer’s standard.

2.3 SOURCE QUALITY CONTROL AND TESTS

A. Provide testing and analysis of glass to Section 01400.

B. Provide shop inspection and testing for safety and insulated glass.

C. Test samples in accordance with ANSI Z97.1, ASTM E773, ASTM E546, and ASTM E576.

PART 3 EXECUTION

3.1 EXAMINATION

A. Section 01300 - Administrative Requirements: Coordination and project conditions.

B. Verify openings for glazing are correctly sized and within acceptable tolerance.

C. Verify surfaces of glazing channels or recesses are clean, free of obstructions impeding moisture movement, weeps are clear, and ready to receive glazing.

3.2 PREPARATION

A. Clean contact surfaces with solvent and wipe dry.

B. Seal porous glazing channels or recesses with substrate compatible primer or sealer.

C. Prime surfaces scheduled to receive sealant.

3.3 INSTALLATION

A. Perform installation in accordance with GANA Glazing Manual.
   1. Glazing Sealants: Comply with ASTM C1193.
   2. Fire Rated Openings: Comply with NFPA 80

B. Exterior Wet/Dry Method (Preformed Tape and Sealant) Installation:
   1. Cut glazing tape to length and set against permanent stops, 3/16 inch below sight line. Seal corners by butting tape and dabbing with compatible butyl sealant.
   2. Apply heel bead of butyl sealant along intersection of permanent stop with frame ensuring full perimeter seal between glass and frame to complete continuity of air and vapor seal.
   3. Place setting blocks at 1/4 points with edge block no more than 6 inches from corners.
   4. Rest glazing on setting blocks and push against tape and heel bead of sealant with sufficient pressure to attain full contact at perimeter of pane or glass unit.

5. Install removable stops, with spacer strips inserted between glazing and applied stops, 1/4 inch below sight line. Place glazing tape on glazing pane or unit with tape 1/4 inch below sight line.
6. Fill gap between glazing and stop with Elastomeric glazing sealant to depth equal to bite of frame on glazing, but not more than 3/8 inch below sight line.
7. Apply cap bead of Elastomeric glazing sealant along void between stop and glazing, to uniform line, flush with sight line. Tool or wipe sealant surface smooth.

C. Interior Wet/Dry Method (Tape and Sealant) Installation:
1. Cut glazing tape to length and install against permanent stops, projecting 1/16 inch above sight line.
2. Place setting blocks at 1/4 points with edge block no more than 6 inches from corners.
3. Rest glazing on setting blocks and push against tape to ensure full contact at perimeter of pane or unit.
4. Install removable stops, spacer shims inserted between glazing and applied stops at 24-inch intervals, 1/4 inch below sight line.
5. Fill gaps between pane and applied stop with Elastomeric glazing sealant to depth equal to bite on glazing, to uniform and level line.
6. Trim protruding tape edge.

3.4 FIELD QUALITY CONTROL

A. Section 01400 - Quality Requirements: Testing and Inspection Services 01700 - Execution Requirements: Testing, adjusting, and balancing.

B. Monitor quality of glazing.

3.5 MANUFACTURER'S FIELD SERVICES

A. Section 01400 - Quality Requirements: Manufacturers’ field services.

B. Glass and glazing product manufacturers to provide field surveillance of installation.

C. Monitor and report installation procedures, and unacceptable conditions.

3.6 CLEANING

A. Section 01700 - Execution Requirements: Final cleaning.

B. Remove glazing materials from finish surfaces.

C. Remove labels after Work is complete.

D. Clean glass and adjacent surfaces.

3.7 PROTECTION OF INSTALLED CONSTRUCTION

A. Section 01700 - Execution Requirements: Protecting installed construction.

B. After installation, mark pane with an 'X' by using removable plastic tape or paste. Do not mark heat absorbing or reflective glass units.

3.8 SCHEDULE

A. See Drawings for location of glass types.

END OF SECTION

DIVISION 9

FINISHES

SECTION 09300

TILE

PART 1 GENERAL

1.1 SUMMARY

A. Section includes ceramic, ceramic mosaic, porcelain and quarry tile for floor and wall applications; cementitious backer board as tile substrate; thresholds at door openings; and ceramic accessories.

B. Related Sections:
1. Section 07900 - Joint Sealers.

1.2 REFERENCES

A. American National Standards Institute:
1. ANSI A108.1 - Installation of Ceramic Tile, A collection.
2. ANSI A108.10 - Specifications for Installation of Grout in Tilework.
3. ANSI A108.1A - Specifications for Installation of Ceramic Tile in the Wet-Set Method with Portland Cement Mortar.
4. ANSI A108.1B - Specifications for Installation of Ceramic Tile on a Cured Portland Cement Mortar Setting Bed with Dry-Set or Latex Portland Cement Mortar.
5. ANSI A108.1C - Specifications for Contractors Option: Installation of Ceramic Tile in the Wet-Set Method with Portland Cement Mortar -or- Installation of Ceramic Tile on a Cured Portland Cement Mortar Setting Bed with Dry-Set or Latex Portland Cement Mortar.
6. ANSI A108.4 - Specifications for Ceramic Tile Installed with Organic Adhesives or Water-Cleanable Tile Setting Epoxy Adhesive.
7. ANSI A108.5 - Specifications for Ceramic Tile Installed with Dry-Set Portland Cement Mortar or Latex-Portland Cement Mortar.
8. ANSI A108.6 - Specifications for Ceramic Tile Installed with Chemical-Resistant, Water-Cleanable Tile-Setting and -Grouting Epoxy.
9. ANSI A108.7 - Specifications for Electrically Conductive Ceramic Tile Installed with Conductive Dry-Set Portland Cement Mortar.
10. ANSI A108.8 - Specifications for Ceramic Tile Installed with Chemical-Resistant Furan Mortar and Grout.
11. ANSI A108.9 - Specifications for Ceramic Tile Installed with Modified Epoxy Emulsion Mortar/Grout.
12. ANSI A118.1 - Standard Specification for Dry-Set Portland Cement Mortar.
13. ANSI A118.3 - Chemical-Resistant, Water-Cleanable, Tile-Setting and -Grouting Epoxy and Water-Cleanable Tile-Setting Epoxy Adhesive.
14. ANSI A118.4 - Latex-Portland Cement Mortar.
15. ANSI A118.5 - Chemical-Resistant Furan Mortar and Grout.
16. ANSI A118.6 - Ceramic Tile Grouts.
17. ANSI A118.8 - Modified Epoxy Emulsion Mortar/Grout.

18. ANSI A118.9 - Test Methods and Specifications for Cementitious Backer Units.
19. ANSI A136.1 - Organic Adhesives for Installation of Ceramic Tile.
20. ANSI A137.1 - Ceramic Tile.

B. American Society for Testing and Materials:
1. ASTM C847 - Standard Specification for Metal Lath.

C. Tile Council of America:
1. TCA - Handbook for Ceramic Tile Installation.

1.3 SUBMITTALS

A. Section 01330 - Submittal Procedures: Submittal procedures.

B. Shop Drawings: Indicate tile layout, patterns, color arrangement, perimeter conditions, junctions with dissimilar materials, control and expansion joints, thresholds, ceramic accessories, and setting details.

C. Product Data: Submit instructions for using grouts and adhesives.

D. Samples: Submit mounted tile and grout on two plywood panels, 12 x 12 inch in size illustrating pattern, color variations, and grout joint size variations:

E. Manufacturer's Certificate: Certify Products meet or exceed specified requirements.

1.4 CLOSEOUT SUBMITTALS

A. Section 01700 - Execution Requirements: Closeout procedures.

B. Operation and Maintenance Data: Submit recommended cleaning methods, cleaning materials, stain removal methods, and polishes and waxes.

1.5 QUALITY ASSURANCE

A. Perform Work in accordance with TCA Handbook and ANSI A108 Series/A118 Series.

B. Maintain one copy of each document on site.

1.6 QUALIFICATIONS

A. Manufacturer: Company specializing in manufacturing products specified in this section with minimum three years documented experience.

B. Installer: Company specializing in performing Work of this section with minimum three years documented experience and approved by tile manufacturer.

1.7 MOCKUP

A. Section 01400 - Quality Requirements: Requirements for mockup.

B. Locate where directed by Architect

C. Remove mockup when directed by Architect.

1.8 PRE-INSTALLATION MEETINGS

A. Section 01300 - Administrative Requirements: Pre-installation meeting.

B. Convene minimum one week prior to commencing work of this section.

1.9 DELIVERY, STORAGE, AND HANDLING

A. Section 01600 - Product Requirements: Product storage and handling requirements.

B. Protect adhesives and grouts from freezing or overheating.

1.10 ENVIRONMENTAL REQUIREMENTS

A. Section 01600 - Product Requirements.

B. Do not install adhesives and grouts in unventilated environment.

C. Maintain ambient and substrate temperature of 50 degrees F during installation of mortar materials.

1.11 EXTRA MATERIALS

A. Section 01700 - Execution Requirements: Spare parts and maintenance products.

B. Supply 100 sq ft of each size, color, and surface finish of tile specified.

PART 2 PRODUCTS

2.1 TILE

A. Manufacturers: As shown on Finish Schedule.

2.2 ACCESSORIES

A. Adhesive Materials:
   1. Epoxy Adhesive: ANSI A118.3, thin-set bond type.

B. Mortar Materials:
   1. Mortar Bed Materials: Portland cement, sand, latex additive, and water.
   2. Mortar Bond Coat Materials:
      a. Dry-Set Portland Cement type: ANSI A118.1.
      b. Latex-Portland Cement type: ANSI A118.4.
      c. Epoxy: ANSI A118.3.

d. Furan: ANSI A118.5.

C. Grout Materials:
1. Epoxy Grout Laticrete: Latapoxy SP-100, ANSI A118.8, modified epoxy emulsion grout, standard color as selected (minimum of 4 colors).

D. Cleavage Membrane: No. 15 asphalt saturated felt.

E. Waterproofing Membrane at Floors: One part trowel applied elastomer urethane membrane; Newgard or Laticrete.

F. Cementitious Backer Board: ANSI A118.9; High density, cementitious, glass fiber reinforced, 1/2 inch thick; 2 inch wide coated glass fiber tape for joints and corners.

G. Thresholds: Marble type, honed finish, full width of wall or frame opening, beveled, both sides, radiused edges from bevel to vertical face.

H. Stone Sealant: Penetrating Sealer, matte finish, non-altering to natural finish.

I. Stone Anchors: Stainless steel angle bracket. Size and number as required by manufacturer.

PART 3 EXECUTION

3.1 EXAMINATION

A. Section 01300 - Administrative Requirements: Coordination and project conditions.

B. Verify surfaces are ready to receive work.

3.2 PREPARATION

A. Protect surrounding work from damage.

B. Vacuum clean surfaces and damp clean.

C. Seal substrate surface cracks with filler. Level existing substrate surfaces to acceptable flatness tolerances.

D. Install cementitious backer board. Tape joints and corners, cover with skim coat of dry-set mortar to feather edge.

E. Prepare substrate surfaces for adhesive installation.

3.3 EXISTING WORK

A. Section 01700 - Execution Requirements: Requirements for maintenance service.

B. Prepare and remodel existing tile installations using materials and methods as specified.

C. Clean and repair existing tile which remains.

3.4 INSTALLATION

A. Install tile, thresholds and grout in accordance with applicable requirements of ANSI A108.1 through A108.10, and TCA Handbook recommendations.

B. Install waterproof membrane under all ceramic tile floors above first floor.

C. Lay tile to pattern indicated. Do not interrupt tile pattern through openings.

D. Place thresholds or edge strips at exposed tile edges.

E. Cut and fit tile to penetrations through tile, leaving sealant joint space. Form corners and bases neatly. Align floor, base and wall joints.

F. Place tile with joints uniform in width, subject to variance in tolerance allowed in tile size. Make joints watertight, without voids, cracks, excess mortar, or excess grout.
   1. Ceramic and Ceramic Mosaic Tile: 1/16 inch.
   2. Porcelain Tile: 1/4 inch
   3. Quarry Tile: 1/4 inch.

G. Form internal angles coved and external angles bullnosed.

H. Install ceramic accessories rigidly in prepared openings.

I. Sound tile after setting. Replace hollow sounding units.

J. Keep expansion joints free of adhesive or grout. Apply sealant to joints. Place joints maximum 24' o.c.

K. Allow tile to set for a minimum of 48 hours prior to grouting.

L. Grout tile joints. Use epoxy grout.

M. Apply sealant to junction of tile and dissimilar materials and junction of dissimilar planes.

N. Installation - Floors - Thin-Set Methods:
   1. Install in accordance with TCA Handbook Method F131 for epoxy bond coat and grout.

O. Installation - Wall Tile:

1. Over cementitious backer units install in accordance with TCA Handbook Method W244, using membrane at toilet rooms and kitchens.
2. Over gypsum wallboard on wood or metal studs install in accordance with TCA Handbook Method W243, thin-set with dry-set or latex-portland cement bond coat.

3.5 CLEANING

A. Section 01700 - Execution Requirements: Final cleaning.

B. Clean tile and grout surfaces.

3.6 PROTECTION OF INSTALLED CONSTRUCTION

A. Section 01700 - Execution Requirements: Protecting installed construction.

B. Do not permit traffic over finished floor surface for 4 days after installation.

END OF SECTION

SECTION 09900

PAINTING

PART 1 GENERAL

1.01 SECTION INCLUDES

A. Surface preparation and field application of paints and coatings.

1.02 RELATED SECTIONS

A. Section 06410 - Custom Casework.

B. Section 08111 - Standard Steel Doors.

C. Section 08112 - Standard Steel Frames.

1.02 REFERENCES

A. ASTM D16 - Definitions of Terms Relating to Paint, Varnish, Lacquer, and Related Products.

B. ASTM D2016 - Test Method for Moisture Content of Wood.

C. NPCA (National Paint and Coatings Association) - Guide to U.S. Government Paint Specifications.

D. SSPC (Steel Structures Painting Council) - Steel Structures Painting Manual.

1.03 DEFINITIONS

A. Conform to ASTM D16 for interpretation of terms used in this Section.

1.04 SUBMITTALS

A. Submit under provisions of Section 01300.

B. Product Data: Provide data on all finishing products.

C. Samples: Submit samples illustrating range of colors and textures available for each surface finishing product scheduled.

D. Samples: Submit samples illustrating selected colors and textures for each color selected.

E. Manufacturer's Instructions: Indicate special surface preparation procedures, substrate conditions requiring special attention.

1.05 QUALIFICATIONS

A. Manufacturer: Company specializing in manufacturing the Products specified in this section with minimum three years documented experience.

B. Applicator: Company specializing in performing the work of this section with minimum three years experience.

1.06 REGULATORY REQUIREMENTS

A. Conform to applicable code for flame and smoke rating requirements for finishes.

1.07 FIELD SAMPLES

A. Provide field sample of paint under provisions of Section 01400.

B. Locate where directed.

A. Accepted sample may not remain as part of the Work.

1.08 DELIVERY, STORAGE, AND HANDLING

A. Deliver, store, protect and handle products to site under provisions of Section 01600.

B. Deliver products to site in sealed and labeled containers; inspect to verify acceptability.

C. Container label to include manufacturer's name, type of paint, brand name, lot number, brand code, coverage, surface preparation, drying time, cleanup requirements, color designation, and instructions for mixing and reducing.

D. Store paint materials at minimum ambient temperature of 45 degrees F and a maximum of 90 degrees F, in ventilated area, and as required by manufacturer's instructions.

1.09 ENVIRONMENTAL REQUIREMENTS

A. Do not apply materials when surface and ambient temperatures are outside the temperature ranges required by the paint product manufacturer.

B. Do not apply exterior coatings during rain or snow, or when relative humidity is outside the humidity ranges required by the paint product manufacturer.

C. Minimum Application Temperatures for Latex Paints: 45 degrees F for interiors; 50 degrees F for exterior; unless required otherwise by manufacturer's instructions.

D. Minimum Application Temperature for Varnish Finishes: 65 degrees F for interior or exterior, unless required otherwise by manufacturer's instructions.

E. Provide lighting level of 80 ft candles measured mid-height at substrate surface.

1.10 EXTRA MATERIALS

A. Furnish under provisions of Section 01700.

B. Provide 1 gallon of each color, type, and surface texture to Owner.

C. Label each container with color, type, texture, and room locations, in addition to the manufacturer's label.

PART 2 PRODUCTS

2.01 MANUFACTURERS

A. Manufacturer:
1. Sherwin Williams
2. Ferrell Calhoun
3. Benjamin Moore
4. Carboline Company (AESS)
5. ICI Devoe Coatings (AESS)
6. International Coatings Limited (AESS)
7. PPG Architectural Finishes (AESS)
8. Tnemec Company, Inc (AESS)
4. Substitutions: Under provisions of Section 01600.

B. Products:
1. Primers
a. Interior:
1) Wood: Opaque Finish: S-W Preprite Classic Primer B28W101
2) Gypsum Board: S-W Preprite 200 Latex Primer B28W200.
3) Metal: S-W All Surface Enamel Primer, A41W210
4) Gypsum Board Epozy: Promar B28-200
5) CMU: S-W Heavy Duty Block - Filler
b. Exterior:
1) Architecturally Exposed Structural Steel (AESS):
Inorganic Zinc-Rich Primer: Complying with SSPC-Paint 20 or SSPC-Paint 29 and compatible with topcoat.

1. Use primer with a VOC content of 420 g/L (3.5 lb/gal.) or less when calculated according to 40 CFR 59, Subpart D (EPA Method 24).

2. Available Products: Subject to compliance with requirements, products that may be incorporated into

the Work include, but are not limited to, the following:

a. Benjamin Moore & Co.; Epoxy Zinc-Rich Primer CM18/19.
b. Carboline Company; Carbozinc 621.
c. ICI Devoe Coatings; Catha-Coat 313.
d. International Coatings Limited; Interzinc 315 Epoxy Zinc-Rich Primer.
e. PPG Architectural Finishes, Inc.; Aquapon Zinc-Rich Primer 97-670.
f. Sherwin-Williams Company (The); Corothane I GalvaPac Zinc Primer.
g. Tnemec Company, Inc.; Tneme-Zinc 90-97.

2. Intermediate Coats:
   a. Exterior
      1) Architecturally Exposed Structural Steel (AESS):
         High-Performance Coating for Steel, Intermediate Coat: High-build urethane or epoxy coating recommended by manufacturer for application over specified zinc-rich primer under specified polyurethane enamel.

         1. Available Products: Subject to compliance with requirements, products that may be incorporated into the Work include, but are not limited to, the following:

         2. Products: Subject to compliance with requirements, provide one of the following:

            a. Benjamin Moore & Co.; M73/M75 Aliphatic Acrylic Urethane Semi-Gloss.
            b. Carboline Company; Carboguard 890 2-Component Epoxy.
            c. ICI Devoe Coatings; Devthane378 Aliphatic Urethane Semi-Gloss Enamel.
            d. International Coatings Limited; Interthane 870.
            e. PPG Architectural Finishes, Inc.; Aquapon 97-130 Epoxy.
            f. Sherwin-Williams Company (The); Macropoxy HS High Solids Epoxy.
            g. Tnemec Company, Inc.; Series 27 Hi-Build Epoxy.

3. Finish Coats:
   a. Interior
      1) Wood (Opaque Finish): S-W Promar 200 Latex Sem-Gloss B31W2200 Series
      2) Wood (Transparent Finish):

a. Stain: S-W Wood Classics Interior Oil Stain A49 Series
b. Wood Filler: S-W Sherwood Natural Filler, D70T1
c. Varnish: S-W Wood Classics Fast Dry Varnish, Satin and Gloss A66 Series

3) Gypsum Board: S-W Promar 200 Semi-gloss
4) Mechanical Room concrete floors: Sikatop Seal 107
5) Gypsum Board Epoxy: waterbase catalized epoxy #B 70.
6) CMU: S-W Duration Home Latex SemiGloss B97-100 Series

b. Exterior

1) Architecturally Exposed Structural Steel (AESS): High-Performance Coating for Steel, Topcoat: High-build, semigloss polyurethane enamel.

1. Available Products: Subject to compliance with requirements, products that may be incorporated into the Work include, but are not limited to, the following:

2. Products: Subject to compliance with requirements, provide one of the following:

a. Benjamin Moore & Co.; M73/M75 Aliphatic Acrylic Urethane Semi-Gloss.
b. Carboline Company; Carbothane 133 HB Aliphatic Polyurethane.
c. ICI Devoe Coatings; Devthane378 Aliphatic Urethane Semi-Gloss Enamel.
d. International Coatings Limited; Interthane 870.
e. PPG Architectural Finishes, Inc.; Aquapon 95-612 Semi-Gloss Polyurethane.
f. Sherwin-Williams Company (The); Corothane II Satin B65-200 Series.
g. Tnemec Company, Inc.; Series 1075 Endura-Shield.

2.02 MATERIALS

A. Coatings: Ready mixed, except field catalyzed coatings. Process pigments to a soft paste consistency, capable of being readily and uniformly dispersed to a homogeneous coating; good flow and brushing properties; capable of drying or curing free of streaks or sags.

B. Accessory Materials: Linseed oil, shellac, turpentine, paint thinners and other materials not specifically indicated but required to achieve the finishes specified, of commercial quality.

C. Patching Materials: Latex filler.

B. Fastener Head Cover Materials: Latex filler.

2.03 FINISHES

A. Refer to schedule at end of section for surface finish

PART 3 EXECUTION

3.01 EXAMINATION

A. Verify site conditions under provisions of Section 01300.

B. Verify that surfaces and substrate conditions are ready to receive work as instructed by the product manufacturer.

C. Examine surfaces scheduled to be finished prior to commencement of work. Report any condition that may potentially affect proper application.

D. Test shop applied primer for compatibility with subsequent cover materials.

E. Measure moisture content of surfaces using an electronic moisture meter. Do not apply finishes unless moisture content of surfaces is below the following maximums:
   1. Plaster and Gypsum Wallboard: 12 percent.
   2. Masonry, Concrete, and Concrete Unit Masonry: 12 percent.
   3. Interior Wood: 15 percent, measured in accordance with ASTM D2016.
   4. Exterior Wood: 15 percent, measured in accordance with ASTM D2016.
   5. Concrete Floors: 8 percent.

3.02 PREPARATION

A. Remove electrical plates, hardware, light fixture trim, escutcheons, and fittings prior to preparing surfaces or finishing.

B. Correct defects and clean surfaces which affect work of this section. Remove existing coatings that exhibit loose surface defects.

C. Seal with shellac and seal marks which may bleed through surface finishes.

D. Impervious Surfaces: Remove mildew by scrubbing with solution of tri-sodium phosphate and bleach. Rinse with clean water and allow surface to dry.

E. Concrete Floors: Remove contaminations, acid etch, and rinse floors with clear water. Verify required acid-alkali balance is achieved. Allow to dry.

F. Gypsum Board Surfaces: Fill minor defects with filler compound. Spot prime defects after repair.

G. Galvanized Surfaces: Remove surface contamination and oils and wash with solvent. Apply coat of etching primer.

H. Shop Primed Steel Surfaces: Sand and scrape to remove loose primer and rust. Feather edges to make touch-up patches inconspicuous. Clean surfaces with solvent. Prime bare steel surfaces. Prime metal items including shop primed items.

I. Interior Wood Items Scheduled to Receive Paint Finish: Wipe off dust and grit prior to priming. Seal knots, pitch streaks, and sappy sections with sealer. Fill nail holes and cracks after primer has dried; sand between coats.

J. Interior Wood Items Scheduled to Receive Transparent Finish: Wipe off dust and grit prior to sealing, seal knots, pitch streaks, and sappy sections with sealer. Fill nail holes and cracks after sealer has dried; sand lightly between coats.

K. Wood and Metal Doors Scheduled for Painting: Seal top and bottom edges with primer.

3.03 APPLICATION

A. Apply products in accordance with manufacturer's instructions.

B. Do not apply finishes to surfaces that are not dry.

C. Apply each coat to uniform finish.

D. Apply each coat of paint slightly darker than preceding coat unless otherwise approved.

E. Sand wood and metal lightly between coats to achieve required finish.

F. Vacuum clean surfaces free of loose particles. Use tack cloth just prior to applying next coat.

G. Allow applied coat to dry before next coat is applied.

H. Where clear finishes are required, tint fillers to match wood. Work fillers into the grain before set. Wipe excess from surface.

I. Prime concealed surfaces of interior and exterior woodwork with primer paint.

J. Prime concealed surfaces of interior woodwork scheduled to receive stain or varnish finish with gloss varnish reduced 25 percent with mineral spirits.

3.04 FIELD QUALITY CONTROL

A. Field inspection and testing will be performed under provisions of Section 01400.

3.05 CLEANING

A. Clean work under provisions of 01700.

B. Collect waste material which may constitute a fire hazard, place in closed metal containers and remove daily from site.

3.06 SCHEDULE - SHOP PRIMED ITEMS FOR SITE FINISHING

A. Architecturally Exposed Structural Steel (Section 05125): All exterior exposed structural steel.

B. Metal Fabrications (Section 05500): Exposed surfaces of lintels, elevator pit ladders, bollards, and all exposed to view structural members.

C. Metal Stairs (Section 05510): Exposed surfaces of stringers, exposed vertical risers, railings, and guardrails.

3.07 SCHEDULE - EXTERIOR SURFACES

A. Steel - Unprimed:
1. One coat of Pro-Industrial Pro-Cryl Universal Metal Primer B66W310.
2. Two coats of DTM Acrylic Semi-Gloss B66 Series.

B. Steel - Shop Primed:
1. Touch-up with Pro-Industrial Pro-Cryl Universal Metal Primer B66W310.
2. Two coats of DTM Acrylic Semi-Gloss B66 Series.

C. Steel - Galvanized:
1. One coat of Pro-Industrial Pro-Cryl Universal Metal Primer B66W310.
2. Two coats of DTM Acrylic Semi-Gloss B66 Series.

3.08 SCHEDULE - INTERIOR SURFACES

A. Concrete Block (CMU)
1. One coat of Prep Rite Block Filler B25W25.
2. Two coats of Pro Industrial Waterbased Catalyzed Epoxy (Eg-Shel) B73-300 Series.

B. Steel - Unprimed:
1. One coat of Pro Industrial Pro-Cryl Universal Metal Primer B66W310.
2. Two coats of Pro Industrial High Performance Acrylic Semi-gloss B66-650 Series.

C. Steel - Primed:
1. One coat of Pro Industrial Pro-Cryl Universal Metal Primer B66W310.
2. Two coats of Pro Industrial High Performance Acrylic Semi-gloss B66-650 Series.

D. Steel - Galvanized:

1. One coat of Pro Industrial Pro-Cryl Universal Metal Primer B66W310.
2. Two coats of Pro Industrial High Performance Acrylic Semi-gloss B66-650 Series.

E. Concrete Floors:
1. One coat of Armor Seal 1000 HS (Reduced 1 pint/Gal with R7K54).
2. One to Two coats of Armor Seal 1000 HS (with Anti-slip Aggregate if required).

END OF SECTION

SECTION 09930

CONCRETE STAIN AND CLEAR TOPCOAT

PART 1 -.GENERAL

1.1 SUMMARY

A. Section includes:
   1. Concrete Stain floor coating
   2. Clear high-performance topcoat

B. Related Sections:
   1. Section 03300 “Cast-In-Place Concrete” for general concrete applications.
   2. Section 07900 “Joint Sealers” for sealant installed in paving joints.

1.2 REFERENCES

A. ASTM International (ASTM):
   1. ASTM C 171: Standard Specification for Sheet Materials for Curing Concrete.
   2. ASTM C 309: Standard Specification for Liquid Membrane-Forming Compounds for Curing Concrete.
   3. ASTM F 1869: Standard Test Method for Measuring Moisture Vapor Emission Rate of Concrete Subfloor Using Anhydrous Calcium Chloride.

1.3 SUBMITTALS

A. Product Data: Manufacturer’s technical data, including Material Safety Data Sheet (MSDS) and installation instructions, for each product specified.

B. Samples for Initial Selection: Manufacturer’s color charts showing full range of colors available.

C. Qualification Data: For manufacturer and Installer.

1.4 QUALITY ASSURANCE

A. Manufacturer Qualifications: [Three} Minimum 3 years of documented experience with the specified products.

B. Installer Qualifications: Authorized NeverStrip Dealer

C. Regulatory Requirements:
   1. Products to comply with United States Clean Air Act for maximum Volatile Organic compound (VOC) content as specified in this Section.

D. Material Source: Obtain each specified material from the same source.

E. Notification: Give a minimum 7 calendar days' notice to manufacturer's authorized field representative before date established for commencement of concrete stain work.

F. Concrete Stain Mockups:
   1. Construct a 5-foot by 5-foot mockup at location selected by Architect.
   2. Provide individual mockups for each color and pattern required.
   3. Construct mockup using materials, processes, and techniques required for the work, including curing procedures. Incorporate representative control, construction, and expansion joints according to Project requirements. Installer for the work to construct mockup.
   4. Mockup to be stained and sealed by the Installer who will actually perform the work for the Project. Record the amount of chemical stain needed per square foot of application to establish coverage rates for the work.
   5. Notify Architect and Owner a minimum of seven calendar days in advance of the date scheduled for each mockup construction.
   6. Obtain the Architect and Owner's acceptance of each mockup prior to commencement of the work.
   7. Each mockup to remain until completion of the work to serve as a quality control standard for the work. Provide suitable protections to preclude damage to mockup.
   8. Demolish and remove each mockup from site when directed.

1.5 DELIVERY, STORAGE, AND HANDLING

A. Deliver products in original factory unopened, undamaged packaging bearing identification of product, manufacturer, batch number, and expiration date as applicable.

B. Store products in a location protected from damage, construction activity, and adverse environmental conditions, and away from combustible materials and sources of heat, according to manufacturer's printed instructions and current recommendations.

C. Handle products according to manufacturer's printed instructions.

1.6 PROJECT CONDITIONS

A. Environmental Conditions: Maintain an ambient temperature between 50 deg F and 90 deg F during application and at least 48 hours after application.

1.7 PREINSTALLATION CONFERENCE

A. Seven calendar days prior to scheduled date of installation, conduct a meeting at Project site to discuss requirements, including application methods. Attendees to include Architect, Owner, Contractor, Installer, and manufacturer's authorized field representative.

PART 2 - PRODUCTS

2.1 ACCEPTABLE MANUFACTURERS

A. Basis of Design: Provide products specified herein manufactured by NeverStrip Floor Coatings, or approved equal.

2.2 MATERIALS

A. Colored Concrete Stain: Water-based urethane solution of metallic salts which colors concrete substrates producing attractive transparent or translucent color effects. Zero VOC content.
   1. Product: NeverStrip Color Concrete Stain
   2. Color(s): Manufacturer's standard.
   3. Topcoat: NeverStrip Matte

PART 3 - EXECUTION

3.1 EXAMINATION

A. Examine areas and conditions under which the concrete stain work will be performed and identify conditions detrimental to the proper and timely completion of the work. Do not proceed until unsatisfactory conditions have been corrected.

B. Interior Applications: Concrete substrates must have a moisture vapor emission rate of less than 5 lbs./1000 sq. ft. per 24 hour based on a 72 hour test period according to ASTM F 1869 or have a relative humidity reading (RH) using an in-situ probe of 85% or less.

C. If the moisture readings exceed these prescribed levels, apply Aquron Corporations Aquron CPT 2000 per the manufacturer's instructions prior to application of the NeverStrip Concrete Stain and Topcoat System.

3.2 PREPARATION

A. New Concrete: Comply with the following:
   1. Newly placed concrete is to sufficiently cure for a minimum of 14 days.
   2. Immediately prior to color staining, thoroughly remove any contaminants, sealers, waxes, finishes, coatings deleterious to subsequent Concrete Stain application.
   3. It may be desirable in order to show aggregate and other concrete patina to prepare the concrete surface wet with resinous diamond encrusted pads with a 175-rpm floor machine. Although depending on the condition of the concrete and the desired affect, the use of 50 grit diamond resin pads followed by 120 grit pads is often desirable.
   4. Finish the floor preparation with removal of diamond resin pad slurry with a high quality squeegee wet-vac or preferably an auto scrubber.
   5. Allow floor to dry completely prior to application.

B. Surface Preparation for New or Existing Concrete:
   1. Concrete surfaces should be completely penetrable before applying the initial application of Concrete Stain. The surface of the concrete should be lightly

mechanically abraded to remove weak cement paste and contaminants. The final surface preparation should approximate a Concrete Surface Profile of 1, (CSP1 as designated by the International Concrete Repair Institute, Alexandria, Virginia). Methods for mechanical abrasion include:

a. Pressure Washing: Use a pressure washer equipped with a fan tip and rated for a minimum pressure capability of 4000 psi.
b. Scrubbing with a rotary floor machine with a Mal-Grit Brush or equivalent.
c. Abrasion of the surface with diamond resin pads

2. Surfaces should be tested to receive stain by spotting with water. Water should immediately darken the substrate and be readily absorbed. If water beads and does not penetrate or only penetrates in some areas, perform additional surface preparation and testing. On denser concrete floors, abrade lightly to open up surfaces. Retest and continue surface preparation until water spots immediately darken and uniformly penetrate concrete surfaces.
3. Clean concrete with desired cleaner, such as NeverStrip's Deep Clean and rinse concrete substrates until rinse water is completely clean.

3.3 CONCRETE STAIN APPLICATION

A. General: Comply with stain manufacturer's printed instructions and current recommendations.
   3. Do not mix the specified Concrete Stain with materials not designated by manufacturer.

B. Protect surrounding areas, landscaping, and adjacent surfaces from overspray and runoff. Divide surfaces into small work sections using walls, joint lines, or other stationary breaks as natural stopping points.

C. Apply Concrete Stain at the coverage rate recommended by the manufacturer and use application equipment according to the Concrete Stain manufacturer's printed instructions.

D. Transfer Concrete Stain to the concrete with recommended pump-up spray equipment and immediately back roll into surface with recommended applicators.

E. Apply multiple coats of one or more colors as desired within 24-hours of the previous coat.

3.4 TOPCOAT APPLICATION

A. Concrete substrate must be completely dry. Test surface for proper pH prior to applying sealer. A pH value of 7-8 desired. If the tested pH value is less than 7, repeat neutralization step until the required pH value is achieved.

B. Conduct a moisture vapor emission test prior to applying any sealer. Refer to the specific sealer's Technical-Data Bulletin for acceptable MVER.

C. Apply topcoat according the topcoat manufacturer's printed instructions at a rate of 300 to 400 square feet per gallon per coat. Maintain a wet edge at all times.

D. Allow topcoat to completely dry before applying additional coats.

E. If second coat of topcoat is applied within 24-hours, there is no need to abrade the first coat. Conditioning of the first topcoat with a maroon conditioning pad is recommended if the second coat of topcoat is applied after 24-hours.

3.5 PROTECTION

A. The General Contractor is responsible for safeguarding the surface quality of concrete slabs before and after application of Concrete Stain and topcoat(s).

B. All concrete floors that will be not be covered by other materials will be protected throughout the project. The concrete slab must be treated as a finished floor at all times during construction.

C. DO NOT APPLY TAPE OF ANY KIND TO COATED SURFACES AT ANY TIME AS THE TAPE MAY DAMAGE THE CONCRETE STAIN AND TOPCOAT

D. No substitutions will be allowed.

3.6 MAINTENANCE

A. Maintain color stained and top coated floors by following Cleaning and Maintenance Guidelines maintained on NeverStrip Floor Coating's website (www.neverstrip.com).

END OF SECTION

DIVISION 10

SPECIALTIES

SECTION 10160

METAL TOILET COMPARTMENTS

PART 1 GENERAL

1.01 SECTION INCLUDES

A. Stainless steel metal toilet doors and accessories.

B. Stainless steel urinal screens.

1.02 RELATED SECTIONS

A. Section 05120 - Structural Steel: Framing above ceiling for partition panel support.

B. Section 10800 - Toilet and Bath Accessories.

1.03 REFERENCES

A. ANSI A117.1 - Safety Standards for the Handicapped.

B. ASTM A167 - Stainless and Heat Resisting Chromium-Nickel Steel Plate, Sheet, and Strip.

C. FS RR-P-1352 - Partitions, Toilet, Complete.

1.04 SUBMITTALS

A. Submit under provisions of Section 01300.

B. Shop Drawings: Indicate partition plan, elevation views, dimensions, details of ceiling supports and door swings.

C. Product Data: Provide data on panel construction, hardware, and accessories.

D. Samples: Submit two samples of partition panels, 2 x 2 inch in size illustrating panel finish, color, and sheen.

E. Manufacturer's Installation Instructions: Indicate special procedures, perimeter conditions requiring special attention.

1.06 REGULATORY REQUIREMENTS

A. Conform to ANSI A117.1 code for access for the handicapped.

1.07 FIELD MEASUREMENTS

A. Verify that field measurements are as indicated on shop drawings.

1.08 COORDINATION

A. Coordinate work under provisions of Section 01100.

B. Coordinate the work with placement of support framing and anchors in wall.

PART 2 PRODUCTS

2.01 ACCEPTABLE MANUFACTURERS

A. Bradley: Series 600 type 304 stainless with satin finish.

B. Global Steel Products: Stainless steel.

C. American Sanitary Partition Corporation

D. Substitutions: Under provisions of Section 01600.

2.02 MATERIALS

A. Steel Sheet: ASTM A167, Type 304 stainless steel.

2.03 ACCESSORIES

A. Attachments, Screws, and Bolts: Stainless steel; tamper proof type, full length stainless steel brackets.

B. Hardware: Stainless steel:
1. Pivot hinges, gravity type, adjustable for door close positioning.
2. Nylon bearings.
3. Thumb turn door latch with exterior emergency access feature.
4. Door strike and keeper with rubber bumper.
5. Coat hook with rubber bumper.
6. Door pull for outswinging doors.

2.04 FABRICATION

A. Fabricate partitions in accordance with FS RR-P-1352.

B. Fabricate components of stainless steel sheets as follows:
1. Panel and Door Faces: 22 gauge.
2. Reinforcement: 14 gauge.
3. Core: Moisture resistant honeycomb.

C. Doors and Panels:
1. Thickness: 1 inch.
2. Door Width: 24 inch.
3. Door Width for Handicapped Use: 36 inch, out-swinging.
4. Height: 58 inch.

D. Door Construction: Sheet steel face, pressure bonded to sound deadening core, form and close edges, miter and weld corners, grind smooth.

E. Urinal Screens: Wall mounted with full-length stainless steel bracket, and screen-to-ceiling vertical upright consisting of tubular headrail stock anchored to ceiling.

F. Internal Reinforcement: Provide in areas of attached hardware and fittings. Mark locations of reinforcement for partition mounted washroom accessories.

2.05 FINISHING

A. Clean, degrease, and neutralize panels.

B. Stainless Steel Surfaces: No. 4 finish.

PART 3 EXECUTION

3.01 EXAMINATION

A. Verify site conditions under provisions of Section 01300.

B. Verify correct spacing of and between plumbing fixtures.

C. Verify correct location of built-in framing, anchorage, and bracing.

3.02 INSTALLATION

A. Install doors secure, rigid, plumb, and level in accordance with manufacturer's instructions.

B. Maintain 3/8 to 1/2 inch space between wall and panels and between wall and end pilasters.

C. Attached panel brackets securely to walls using anchor devices.

D. Attach panels and pilasters to brackets with tamper proof through bolts and nuts. Locate head rail joints at pilaster center lines.

E. Anchor urinal screen panels to walls with two panel brackets and vertical upright consisting of pilaster anchored to floor and ceiling.

F. Provide adjustment for floor variations with screw jack through steel saddles integral with pilaster. Conceal floor fastenings with pilaster shoes.

G. Support pilasters from built-in framing using two adjustable hanging studs providing vertical leveling. Conceal ceiling fastenings with pilaster shoe.

H. Equip each door with two hinges, one door latch, one coat hook and bumper; outswinging door with pull.

I. Install door strike and keeper with door bumper on each pilaster in alignment with door latch.

J. Field touch-up of scratches or damaged enamel finish will not be permitted.

K. Replace damaged or scratched materials with new materials.

3.03 ERECTION TOLERANCES

A. Maximum Variation From True Position: 1/4 inch.

B. Maximum Variation From Plumb: 1/8 inch.

3.04 ADJUSTING

A. Adjust work under provisions of Section 01700.

B. Adjust and align hardware to uniform clearance at vertical edge of doors, not exceeding 3/16 inch.

C. Adjust hinges to position doors in full closed position when unlatched. Return out swinging doors to closed position.

D. Adjust adjacent components for consistency of line or plane.

END OF SECTION

SECTION 10210

WALL LOUVERS

PART 1 GENERAL

1.1 SUMMARY

A. Section includes aluminum fixed operable louvers, frames and accessories.

B. Related Sections:
   1. Section 07900 - Joint Sealers: Sealant at louver perimeter.
   2. Section 08911 - Glazed Aluminum Curtainwall: Frame for insertion of louver.
   3. Section 15810 - Ducts: Ductwork attachment to louver.

1.2 REFERENCES

A. Air Movement and Control Association International, Inc.:
   1. AMCA 500 - Test Methods for Louvers, Dampers, and Shutters.

B. American Society for Testing and Materials:
   1. ASTM B209 - Standard Specification for Aluminum and Aluminum-Alloy Sheet and Plate.
   2. ASTM B221 - Standard Specification for Aluminum and Aluminum-Alloy Extruded Bars, Rods, Wire, Profiles, and Tubes.

C. Underwriters Laboratories Inc.:
   1. UL - Electrical Construction Equipment Directory.

1.3 PERFORMANCE REQUIREMENTS

A. Louver: Pressure Drop - 2 @ 900 CFM's.

B. Louver: To permit 49 percent free area.

C. Louver: Designed to meet all applicable codes in terms of wind speed.

1.4 SUBMITTALS

A. Section 01300 - Submittals: Submittal procedures.

B. Shop Drawings: Indicate louver layout plan and elevations, opening and clearance dimensions, tolerances; head, jamb and sill details; blade configuration, screens, blankout areas required, and frames and wiring diagrams.

C. Product Data: Submit data describing design characteristics, maximum recommended air velocity, design free area, materials and finishes.

D. Samples: Submit two 2" x 2" in size illustrating finish and color of exterior and interior surfaces.

E. Manufacturer's Certificate: Certify products meet or exceed specified requirements.

1.5 CLOSEOUT SUBMITTALS

A. Section 01700 – Contract Closeout: Closeout procedures.

B. Operation and Maintenance Data: Submit Operation and Maintenance Data.

1.6 QUALITY ASSURANCE

A. Perform Work in accordance with AMCA Certification for louvers, in accordance with AMCA 500.

B. Conform to applicable code for closing operable louvers in conjunction with fire and smoke alarm system.

C. Products Requiring Electrical Connection: Listed and classified by Underwriters Laboratories, Inc., as suitable for purpose specified and indicated.

1.7 QUALIFICATIONS

A. Manufacturer: Company specializing in manufacturing Products specified in this section with minimum three years documented experience.

1.8 FIELD MEASUREMENTS

A. Verify field measurements prior to fabrication.

1.9 COORDINATION

A. Section 01039 – Coordination and Meetings: Coordination and project conditions.

B. Coordinate Work with installation of metal siding masonry flashings.

C. Coordinate Work with installation of mechanical ductwork and electrical services to motorized devices.

1.10 WARRANTY

A. Section 01700 – Contract Closeout: Product warranties and product bonds.

PART 2 PRODUCTS

2.1 LOUVERS

A. Wall Louvers:

1. Ruskin: ELF375DXD, Aluminum
2. Construction Specialties, or equal. Aluminum

2.2 COMPONENTS

A. Aluminum: ASTM B221, 6063 alloy, extruded shape, sheet, prefinished with shop applied fluoropolymer finish, custom color as required.

2.3 ACCESSORIES

A. Fasteners and Anchors: Stainless steel type.

B. Primer: Zinc chromate, alkyd type.

C. Flashings: Of same material as louver frame. Aluminum

D. Sealants: type specified in Section 07900.

2.4 FABRICATION

A. Louver Panel Thickness: 1 - 3/8 inches deep, face measurements as indicated on Drawings.

B. Louver Blade Design: Sloped at 45 degrees; reinforced with intermediate stiffeners, integral and lateral rain water stops positioned on blade.

C. Louver Frame: Channel shape, welded corner joints.

D. Intermediate Mullions: Concealed of extruded aluminum, profiled to suit louver frame.

E. Head and Sill Flashings: Extruded to required shape, single length in one piece for each location.

F. Screens: Install screen mesh in shaped frame, reinforce corner construction, shop install to louver with fasteners.

G. Blank-Out Sheeting on Interior of Louver: Same material as louver and frame:
1. Configuration: Single sheet.
2. Face Material: Aluminum
3. Core: Rigid polystyrene.

2.5 FACTORY FINISHING

A. Exterior Aluminum Surfaces: Prepainted finish of custom color.

EXECUTION

2.6 EXAMINATION

A. Section 01039 – Coordination and Meetings: Coordination and project conditions.

B. Verify prepared openings and flashings are ready to receive Work and opening dimensions are as indicated on shop drawings.

C. Verify electric power is available and of correct characteristics.

2.7 INSTALLATION

A. Install louvers level and plumb in curtainwall framing system. Verify all installation methods with curtainwall manufacturer so as not to affect the warranty of the curtainwall system.

B. Install flashings and align louver assembly to ensure moisture shed from flashings and diversion of moisture to exterior.

C. Secure louvers in opening framing with concealed fasteners, approved by the curtainwall manufacturer.

D. Install insect screen and frame to interior of louver.

E. Install perimeter sealant in accordance with Section 07900.

2.8 ADJUSTING

A. Section 01700 – Contract Closeout: Testing, adjusting, and balancing.

B. Adjust operable louvers for freedom of movement of control mechanism. Lubricate operating joints.

2.9 CLEANING

A. Section 01700 – Contract Closeout - Final cleaning.

B. Strip protective finish coverings.

C. Clean surfaces and components.

END OF SECTION

SECTION 10523

FIRE EXTINGUISHERS AND CABINETS

PART 1 GENERAL

1.1 SUMMARY

A. Section includes fire extinguishers; fire blankets; fire extinguisher cabinets; and brackets for wall mounting.

B. Related Sections:
   1. Section 06114 - Wood Blocking and Curbing: Wood blocking and shims.
   2. Section 09260 - Gypsum Board Assemblies: Roughed-in wall openings.

1.2 REFERENCES

A. National Fire Protection Association:
   1. NFPA 10 - Standard for Portable Fire Extinguishers.

B. Underwriters Laboratories Inc.:
   1. UL - Fire Protection Equipment Directory.

1.3 PERFORMANCE REQUIREMENTS

A. Conform to NFPA 10.

B. Provide extinguishers classified and labeled by Underwriters Laboratories Inc. for purpose specified and indicated.

C. Provide fire extinguisher cabinets classified and labeled by Underwriters Laboratories Inc. For cabinets in fire-rated walls.

1.4 SUBMITTALS

A. Section 01330 - Submittal Procedures: Submittal procedures.

B. Shop Drawings: Indicate cabinet physical dimensions, rough-in measurements for recessed cabinets, location and fire ratings.

C. Product Data: Submit extinguisher operational features, color and finish and anchorage details.

D. Manufacturer's Installation Instructions: Submit special criteria and wall opening coordination requirements.

E. Manufacturer's Certificate: Certify Products meet or exceed specified requirements.

1.5 CLOSEOUT SUBMITTALS

A. Section 01700 - Execution Requirements: Closeout procedures.

B. Operation and Maintenance Data: Submit test, refill or recharge schedules and re-certification requirements.

1.6 ENVIRONMENTAL REQUIREMENTS

A. Section 01600 - Product Requirements: Environmental conditions affecting products on site.

B. Do not install extinguishers when ambient temperature is capable of freezing extinguisher ingredients.

PART 2 PRODUCTS

2.1 FIRE EXTINGUISHERS

A. Manufacturers:
   1. JL Industries.
   2. Larsen's Manufacturing Co.
   3. Substitutions: Section 01600 - Product Requirements.

B. Dry Chemical Type: Cast steel tank, with pressure gage; Class 2A:10BC.

C. Extinguisher Finish: Steel, enamel to color as selected.

2.2 FIRE EXTINGUISHER CABINETS

A. Metal: Formed sheet steel, primed; 0.036 inch thick base metal.

B. Configuration: Semi-recessed type, sized to accommodate accessories.

C. Trim Type: Flat.

D. Door: 0.016 inch thick, reinforced for flatness and rigidity; lock with break glass access.

E. Door Glazing: Glass, clear, 1/8 inch thick tempered.

F. Cabinet Mounting Hardware: Appropriate to cabinet, non-locking.

G. Form cabinet enclosure with right angle inside corners and seams. Form perimeter trim and door stiles.

H. Pre-drill for anchors.

I. Hinge doors for 180 degree opening with continuous piano hinge. Furnish roller type catch.

J. Weld, fill, and grind components smooth.

K. Glaze doors with resilient channel gasket glazing.

L. Finishing Cabinet Exterior Trim and Door: Custom color.

M. Finishing Cabinet Interior: Baked enamel. Custom color.

N. Cabinet shall be non- locking.

2.3 ACCESSORIES

A. Cabinet Signage: "FIRE EXTINGUISHER".

PART 3 EXECUTION

3.1 EXAMINATION

A. Section 01300 - Administrative Requirements: Coordination and project conditions.

B. Verify rough openings for cabinet are correctly sized and located.

3.2 INSTALLATION

A. Install cabinets plumb and level in wall openings, 60 inches from finished floor to top of cabinet.

B. Secure rigidly in place.

C. Place extinguishers and accessories in cabinets.

D. Position cabinet signage as required by authorities having jurisdiction.

END OF SECTION

SECTION 10800

TOILET AND BATH ACCESSORIES

PART 1 GENERAL

1.1 SUMMARY

A. Section includes toilet accessories.

B. Related Sections:
   1. Section 09260 - Gypsum Board Assemblies: In-wall framing and plates

1.2 REFERENCES

A. American Society for Testing and Materials:
   1. ASTM A123/A123M - Standard Specification for Zinc (Hot-Dip Galvanized) Coatings on Iron and Steel Products.
   2. ASTM A269 - Standard Specification for Seamless and Welded Austenitic Stainless Steel Tubing for General Service.
   3. ASTM A653/A653M - Standard Specification for Steel Sheet, Zinc-Coated (Galvanized) or Zinc-Iron Alloy-Coated (Galvannealed) by the Hot-Dip Process.
   4. ASTM A666 - Standard Specification for Austenitic Stainless Steel Sheet, Strip, Plate, and Flat Bar.
   5. ASTM B456 - Standard Specification for Electrodeposited Coatings of Copper Plus Nickel Plus Chromium and Nickel Plus Chromium.
   6. ASTM C1036 - Standard Specification for Flat Glass.

B. Federal Specification Unit:
   1. FS A-A-3002 - Mirrors, Glass.

1.3 SUBMITTALS

A. Section 01330 - Submittal Procedures: Submittal procedures.

B. Product Data: Submit data on accessories describing size, finish, details of function, attachment methods.

C. Manufacturer's Installation Instructions: Submit special procedures, conditions requiring special attention.

1.4 COORDINATION

A. Section 01300 - Administrative Requirements: Coordination and project conditions.

B. Coordinate the Work with placement of internal wall reinforcement and reinforcement of toilet partitions to receive anchor attachments.

PART 2 PRODUCTS

2.1 TOILET AND BATH ACCESSORIES

A. Manufacturers:
   1. American Specialties.
   2. Bradley Corp.
   3. Bobrick
   4. GoJo
   5. Substitutions: Or equal.

2.2 COMPONENTS

A. Accessories - General: Shop assembled, free of dents and scratches and packaged complete with anchors and fittings, steel anchor plates, adapters, and anchor components for installation.
   1. Grind welded joints smooth.
   2. Fabricate units made of metal sheet of seamless sheets, with flat surfaces.

B. Keys: Furnish 4 keys for each accessory to Owner; master key accessories.

C. Stainless Steel Sheet: ASTM A666, Type 304.

D. Stainless Steel Tubing: ASTM A269, stainless steel.

E. Galvanized Sheet Steel: ASTM A653, G90 zinc coating.

F. Mirror Glass: Float glass, Type I, Class 1, Quality q2 (ASTM C 1036), with silvering, copper coating, and suitable protective organic coating to copper backing in accordance with FS A-A-3002.

G. Adhesive: Two component epoxy type, waterproof.

H. Fasteners, Screws, and Bolts: Hot dip galvanized, tamper-proof.

I. Expansion Shields: Fiber, lead, or rubber as recommended by accessory manufacturer for component and substrate.

2.3 TOILET ROOM ACCESSORIES

A. Grab Bars: See Sheets A9.0 for locations & sizes
   1. Bradley: Model 812
   2. American Specialties: Model 3200
   3. Or equal.

B. Coat/Towel Hooks: Typical at all Toilet doors (interior side)
   1. Bobrick: B 9542
   2. Or equal

C. Mirrors:
   1. Bobrick: B 293 1830
   2. Or equal

D. Toilet Paper Holder: Typical at all Toilets
   1. Bobrick: B 2740
   2. Or equal

E. Soap Dispenser:
   1. GoJo: Model FMX-12
   2. Or equal.

F. Paper Towel Dispenser:
   1. Bobrick: B 39619
   3. Or equal.

G. Mop Rack/Utility Shelf: Typical at all Janitors' Rooms
   1. Bradley: Model 9934
   2. American Specialties: Model 1308-4
   3. Or equal.

H. Lavatory Pipe Insulation Cover:
   1. Tru Bro Lav Guard
   4. Handi-Lav Guard Model #102
   5. Or equal.

PART 3

3.1 FACTORY FINISHING

A. Stainless Steel: No. 4 satin-brushed finish.

B. Chrome/Nickel Plating: ASTM B456, Type SC 2, satin polished finish, unless otherwise noted.

C. Baked Enamel: Pretreat to clean condition, apply one coat primer and minimum two coats electrostatic baked enamel.

D. Galvanizing for Items other than Sheet: ASTM A123/A123M to 1.25 oz/sq yd. Galvanize ferrous metal and fastening devices.

E. Shop Primed Ferrous Metals: Pretreat and clean, spray apply one coat primer and bake.

F. Back paint components where contact is made with building finishes to prevent electrolysis.

PART 4 EXECUTION

4.1 EXAMINATION

A. Section 01300 - Administrative Requirements: Coordination and project conditions.

B. Verify exact location of accessories for installation.

C. Verify field measurements are as indicated on product data.

D. See Section 06114 and Section 09260 for installation of blocking and reinforcing plates in walls.

4.2 PREPARATION

A. Deliver inserts and rough-in frames to site for timely installation.

B. Provide templates and rough-in measurements as required.

4.3 EXISTING WORK

A. Clean and repair existing toilet accessories which remain or are to be reinstalled.

4.4 INSTALLATION

A. Install plumb and level, securely and rigidly anchored to substrate.

B. Mounting Heights and Locations: As indicated on Drawings.

END OF SECTION